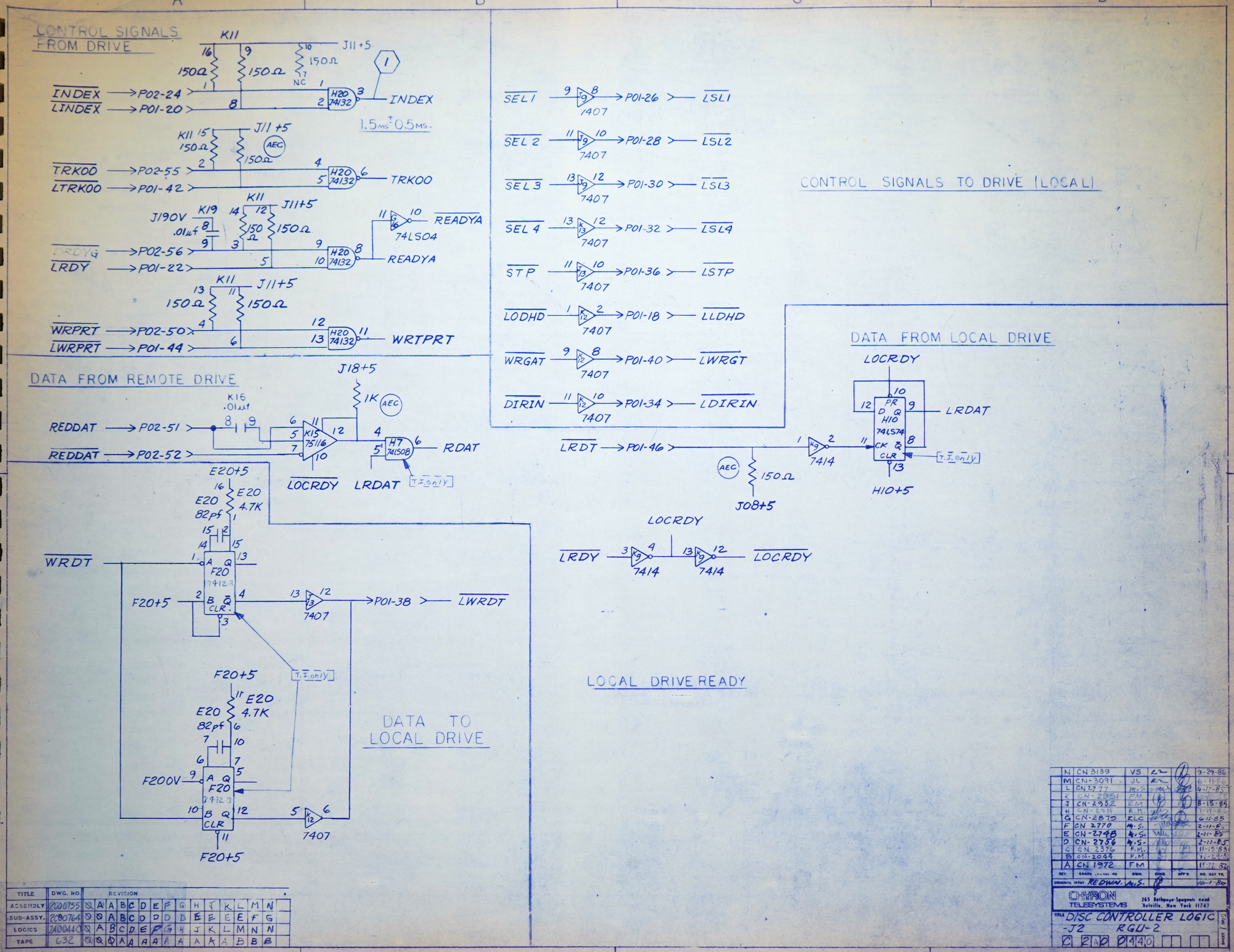
CONTROL SIGNALS FROM DRIVE
INDEX → P02-24
LINDEX → P01-20
TRK00 → P02-55
LTRK00 → P01-42
LRDY → P01-22
WRPRT → P02-50
LWRPRT → P01-44
1.5ms ± 0.5ms.
READYA
WRTPRT
DATA FROM REMOTE DRIVE
REDDAT → P02-51
REDDAT → P02-52
LOCRDY
LRDAT
RDAT
WRDT
F20+5
F200V
P01-38
LWRDT
DATA TO LOCAL DRIVE
SEL1 → P01-26 → LSL1
SEL2 → P01-28 → LSL2
SEL3 → P01-30 → LSL3
SEL4 → P01-32 → LSL4
STP → P01-36 → LSTP
LODHD → P01-18 → LLDHD
WRGAT → P01-40 → LWRGT
DIRIN → P01-34 → LDIRIN
CONTROL SIGNALS TO DRIVE (LOCAL)
DATA FROM LOCAL DRIVE
LRDT → P01-46
LOCRDY
LRDAT
H10+5
J08+5
LRDY
LOCRDY
LOCAL DRIVE READY
TITLE | DWG. NO. | REVISION
ASSEMBLY | 2C00755 | Ø A A B C D E F G H J K L M N
SUB-ASSY. | 2C00764 | Ø Ø A B C D D D E E E E F G
LOGICS | 2A00440 | Ø A B C D E F G H J K L M N N
TAPE | 632 | Ø Ø Ø A A A A A A A A A B B B
N | CN 3139 | VS | 9-29-86
M | CN-3091 | JL | 6-11-86
L | CN 2977 | M.S. | 10-17-85
K | CN-2951 | FM | 8-15-85
J | CN-2952 | RM | 8-15-85
H | CN-2911 | R.M. | 7-17-85
G | CN-2879 | RLC | 6-11-85
F | CN 2770 | M.S. | 2-11-85
E | CN-2748 | M.S. | 2-11-85
D | CN-2756 | M.S. | 2-11-85
C | CN-2376 | F.M. | 11-15-83
B | CN-2044 | F.M. | 11-29-82
A | CN 1972 | FM | 11-22-82
REV. | ENGRG. CHANGE NO. | DWN. | CHKD. | APP'D. | NO. DAY YR.
ORIGINAL ISSUE REDWN. | M.S. | 10-1-80
CHYRON TELESYSTEMS
265 Bethpage-Spagnoli Road
Melville, New York 11747
TITLE DISC CONTROLLER LOGIC
-J2 RGU-2
C 2A0 0440
SHEET 1 OF 2

TRACK EQUALITY TEST

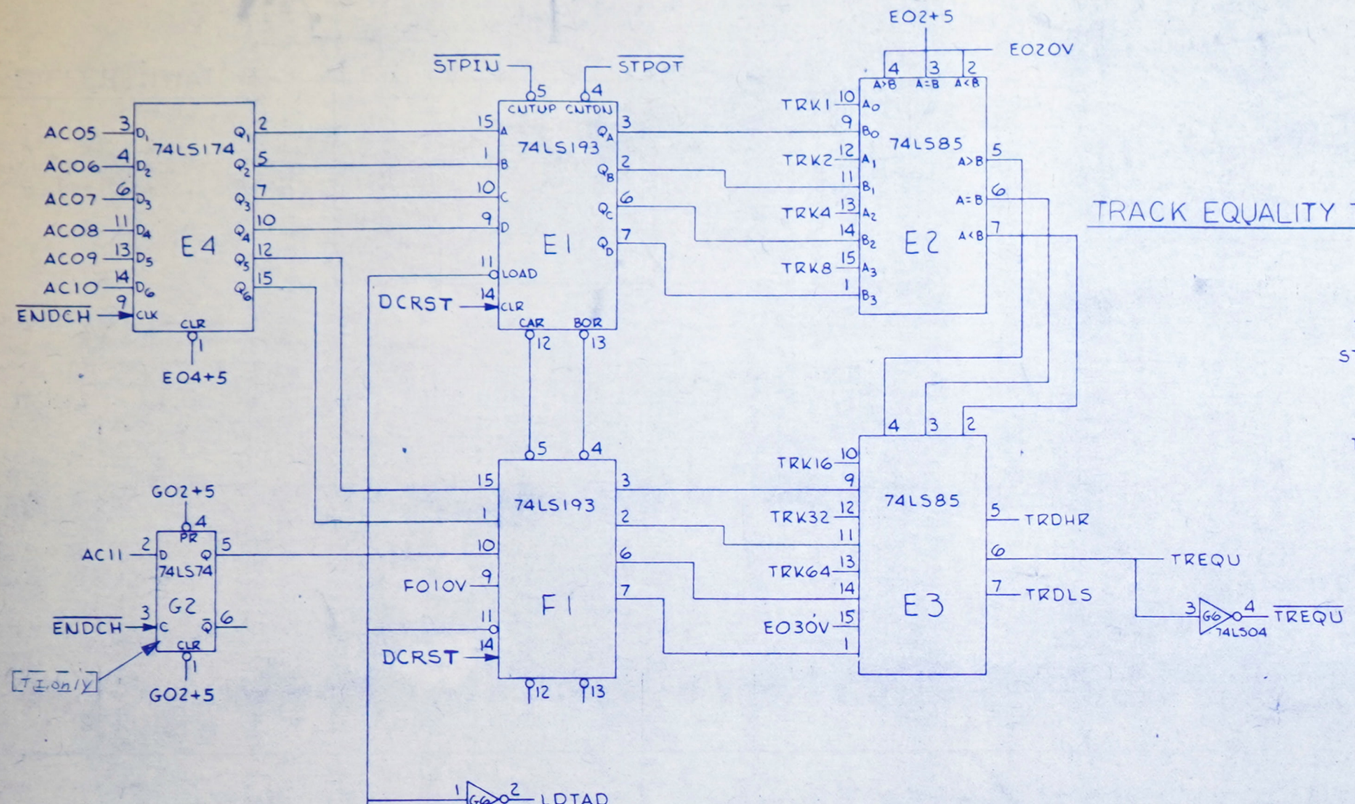

HEAD / STEPPER MOTOR CONTROL

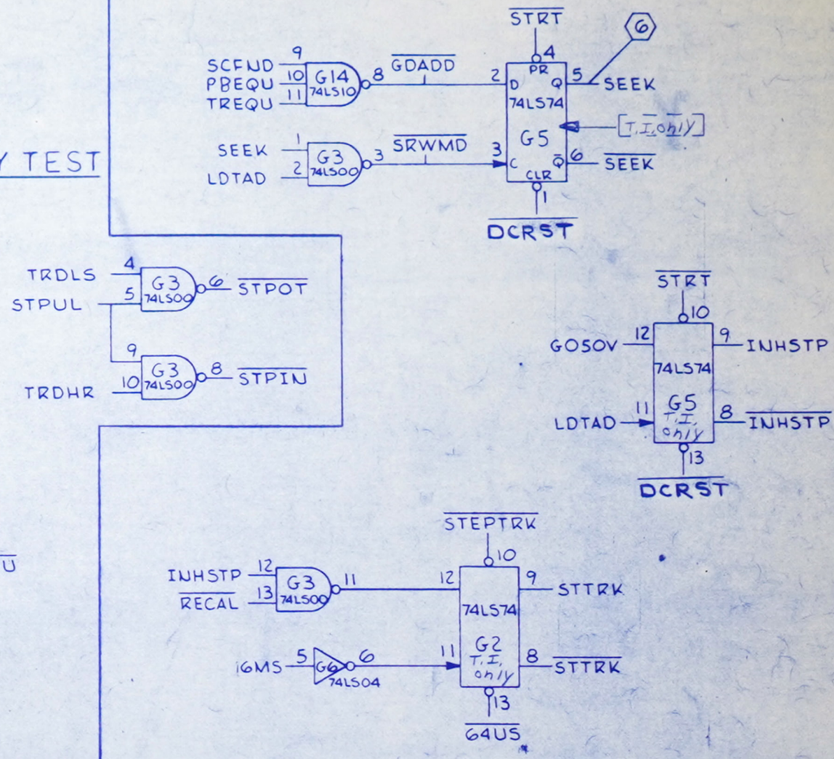

ADDRESS CHARACTER LATCH

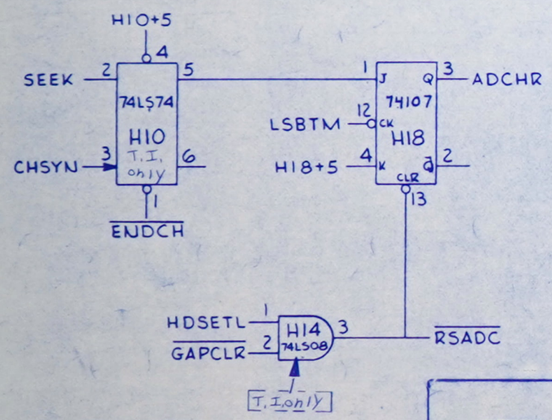

DISK CONTROLLER TIMING

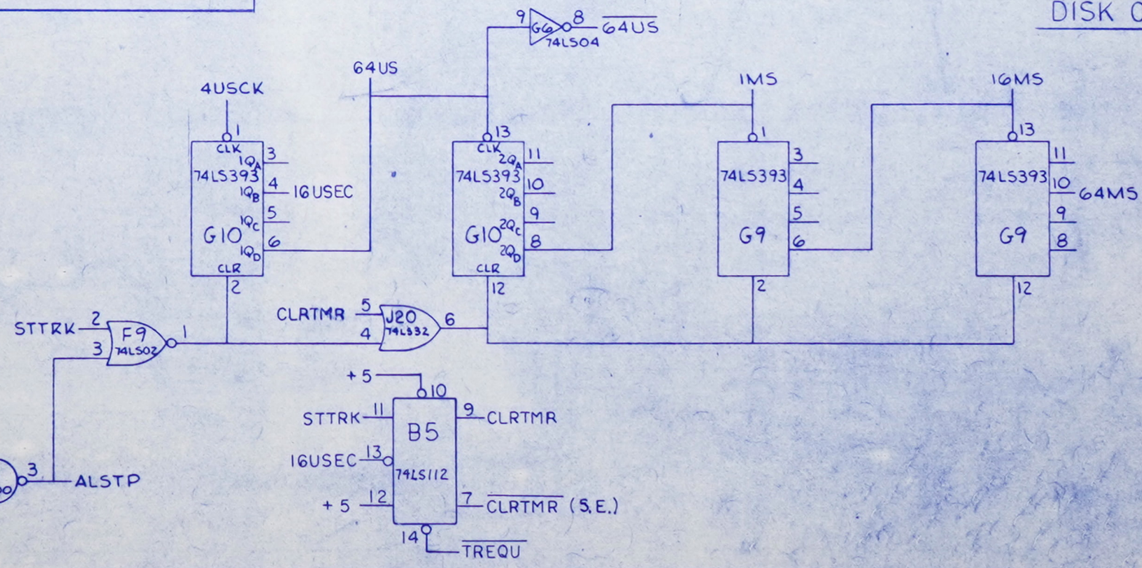

CHYRON TELESYSTEMS

DISC CONTROLLER - J2
LOGICS -CHYRON RGU-2
C 2AC C440 REV N

DATA DIFFERENTIATOR

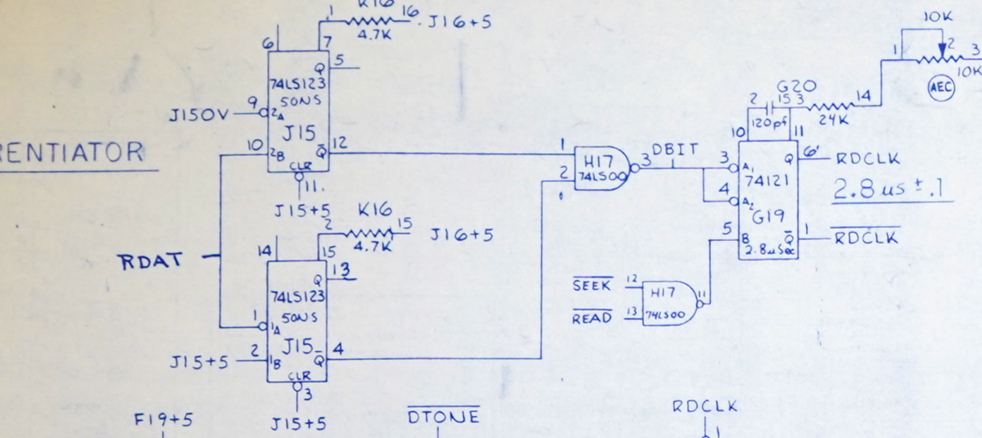

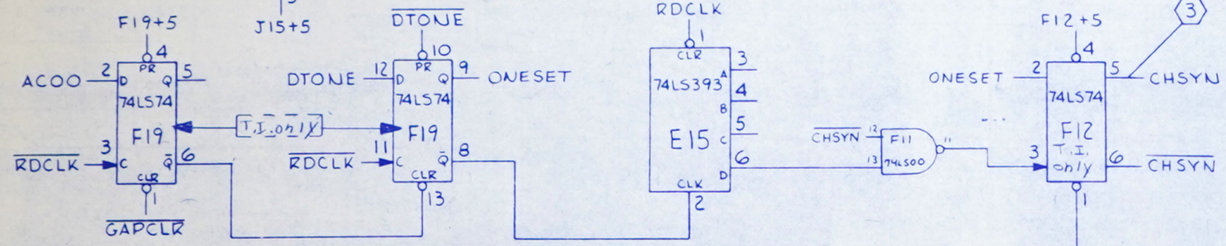

BIT CLOCK COUNTER
READ/WRITE

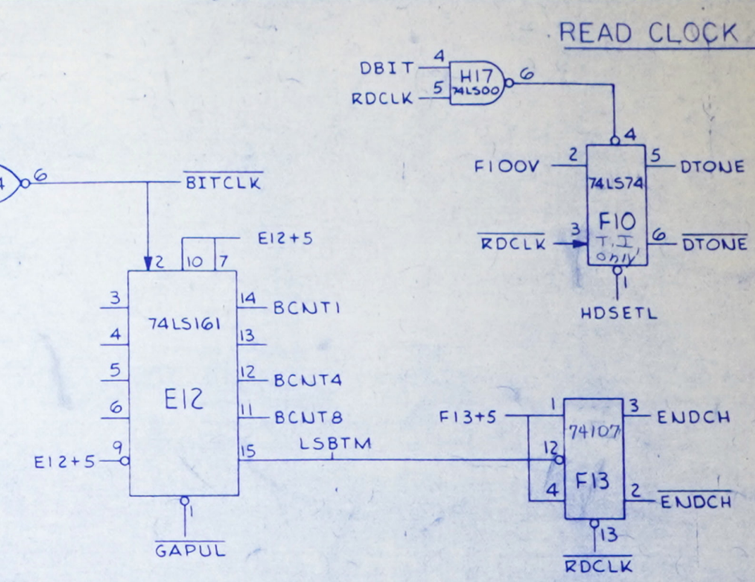

READ CLOCK SORTER

READ/WRITE FLOP

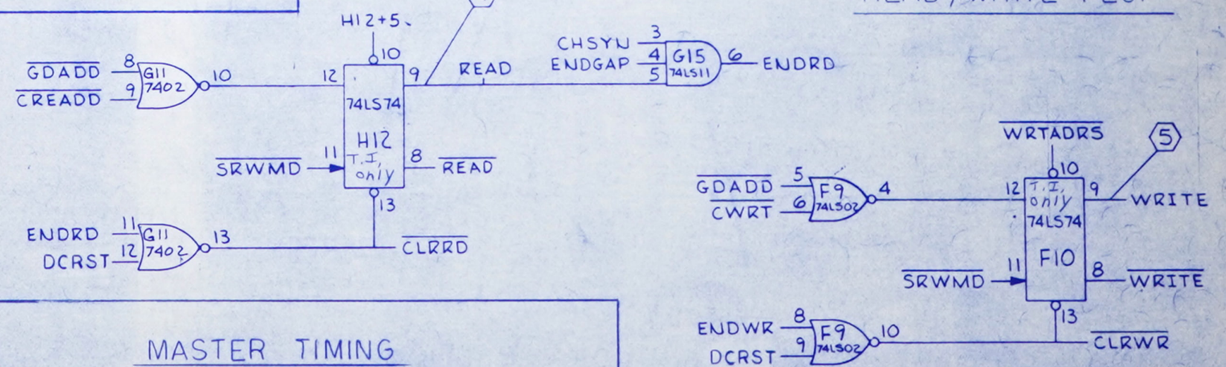

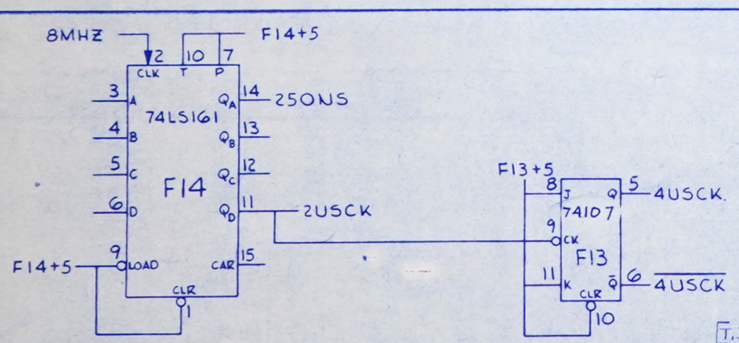

WRITE CLOCK SERIAL

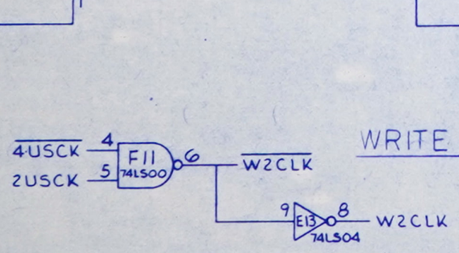

WRITE ONE'S CLOCK

MASTER TIMING

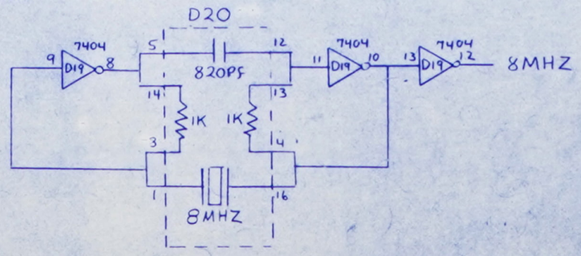

REV	ENGRG CHANGE NO	DWN	CHKD	APP	MO DAY YR
ORIGINAL ISSUE					8 4 7 8

CHYRON TELESYSTEMS

TITLE: DISC CONTROLLER - J2
LOGICS -CHYRON RGU2
C 2A0 0440 REV N
SHEET 1 OF 12

SECTOR COMPARE / PARITY EQUALITY

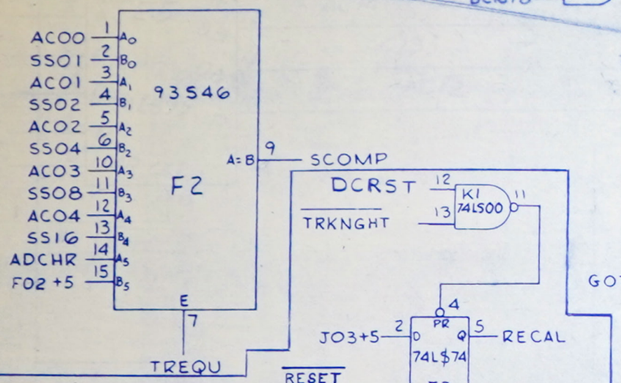

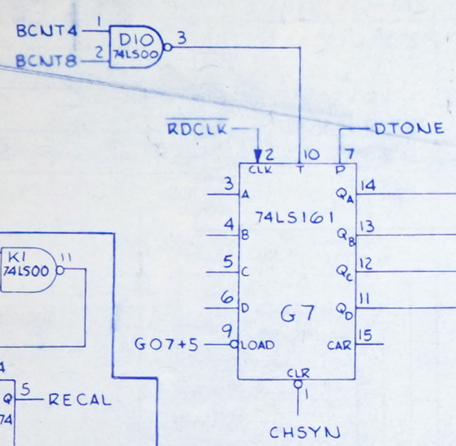

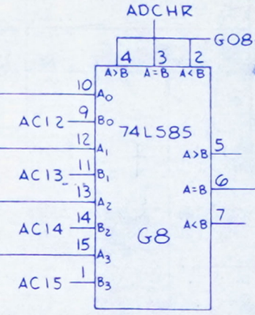

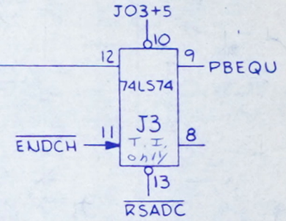

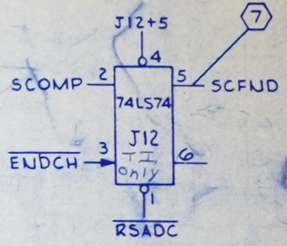

STEPPER MOTOR CONTROL

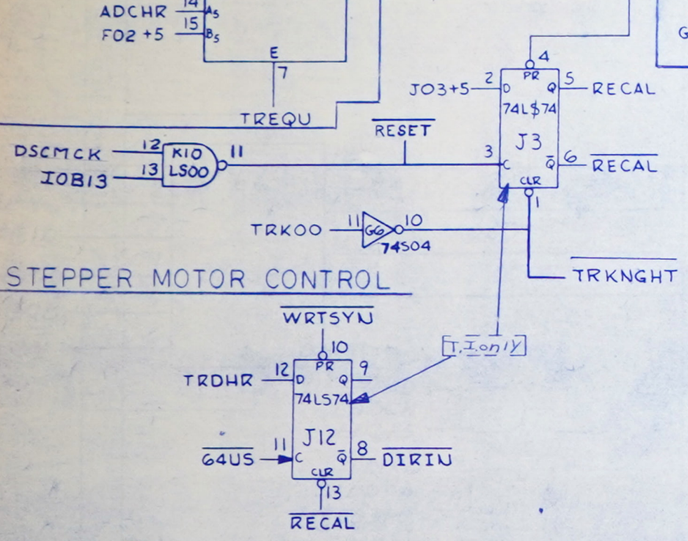

GAP DETECTION

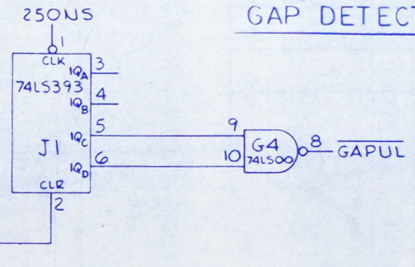

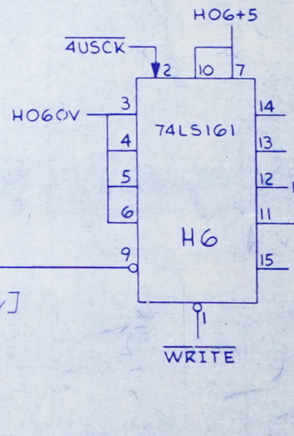

DRIVE HEAD CONTROL

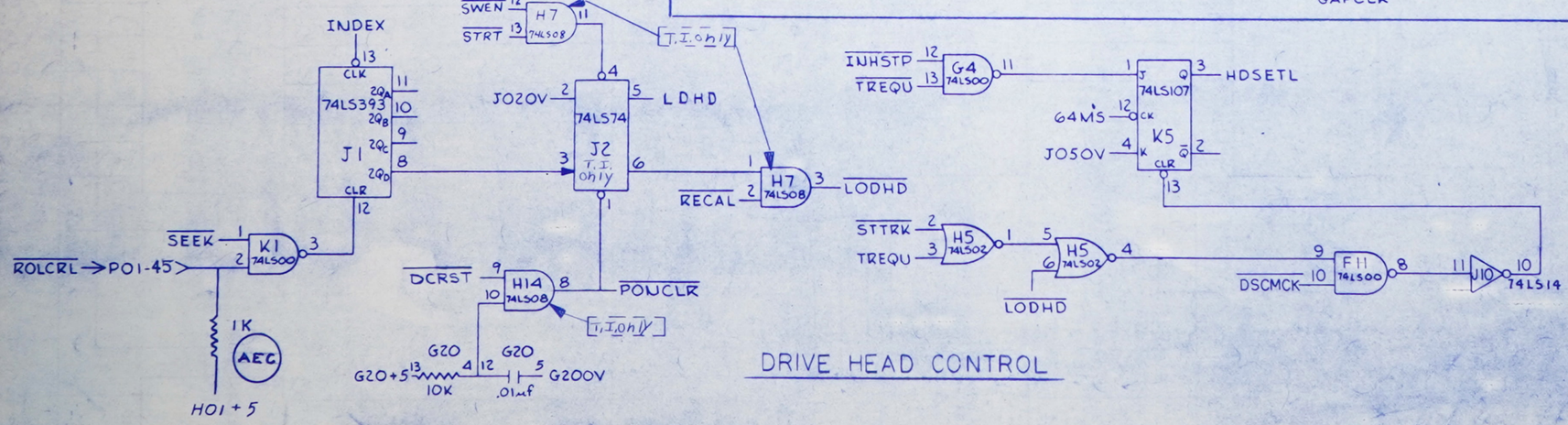

REV	ENGRG CHANGE NO	DWN	CHKD		MO DAY YR
ORIGINAL ISSUE					2-9-78

CHYRON TELESYSTEMS

DISC CONTROLLER - J2
LOGICS - CHYRON RGU2
0 2A0 044 0 REV 1

SHEET 5 of 12

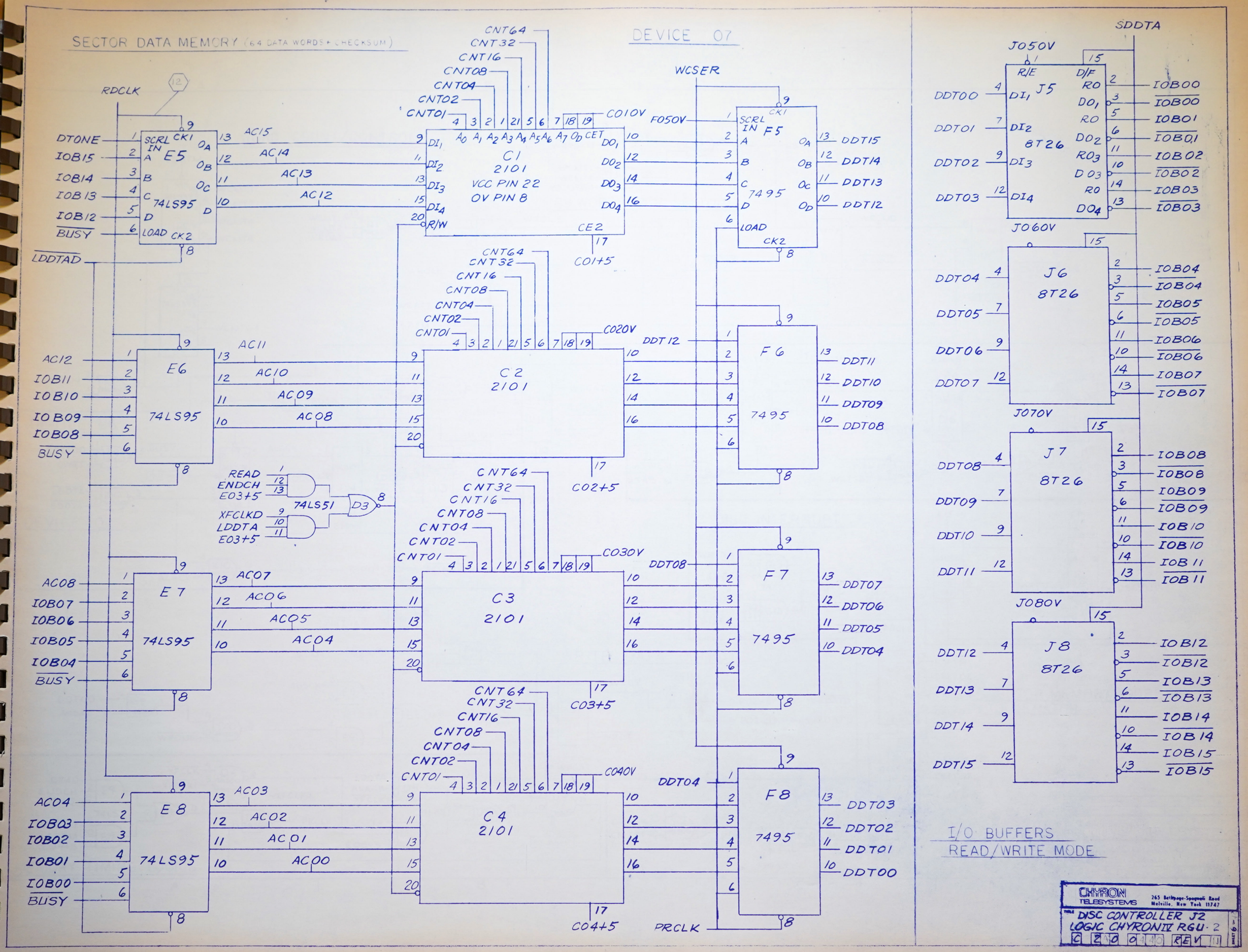
SECTOR DATA MEMORY (64 DATA WORDS + CHECKSUM)
DEVICE 07
RDCLK
WCSER
SDDTA
E5 74LS95
E6 74LS95
E7 74LS95
E8 74LS95
C1 2101 VCC PIN 22 OV PIN 8
C2 2101
C3 2101
C4 2101
F5 7495
F6 7495
F7 7495
F8 7495
J5 8T26
J6 8T26
J7 8T26
J8 8T26
J050V
J060V
J070V
J080V
CO10V
CO20V
CO30V
CO40V
CO1+5
CO2+5
CO3+5
CO4+5
DTONE
IOB15
IOB14
IOB13
IOB12
BUSY
LDDTAD
AC15
AC14
AC13
AC12
AC11
AC10
AC09
AC08
AC07
AC06
AC05
AC04
AC03
AC02
AC01
AC00
IOB11
IOB10
IOB09
IOB08
IOB07
IOB06
IOB05
IOB04
IOB03
IOB02
IOB01
IOB00
READ
ENDCH
E03+5
XFCLKD
LDDTA
74LS51
D3
F050V
DDT15
DDT14
DDT13
DDT12
DDT11
DDT10
DDT09
DDT08
DDT07
DDT06
DDT05
DDT04
DDT03
DDT02
DDT01
DDT00
PRCLK
I/O BUFFERS
READ/WRITE MODE
CHYRON TELESYSTEMS
265 Bethpage-Spagnoli Road
Melville, New York 11747
DISC CONTROLLER J2
LOGIC CHYRON IV RGU-2
C 2 0 0 4 4 0 REV 11

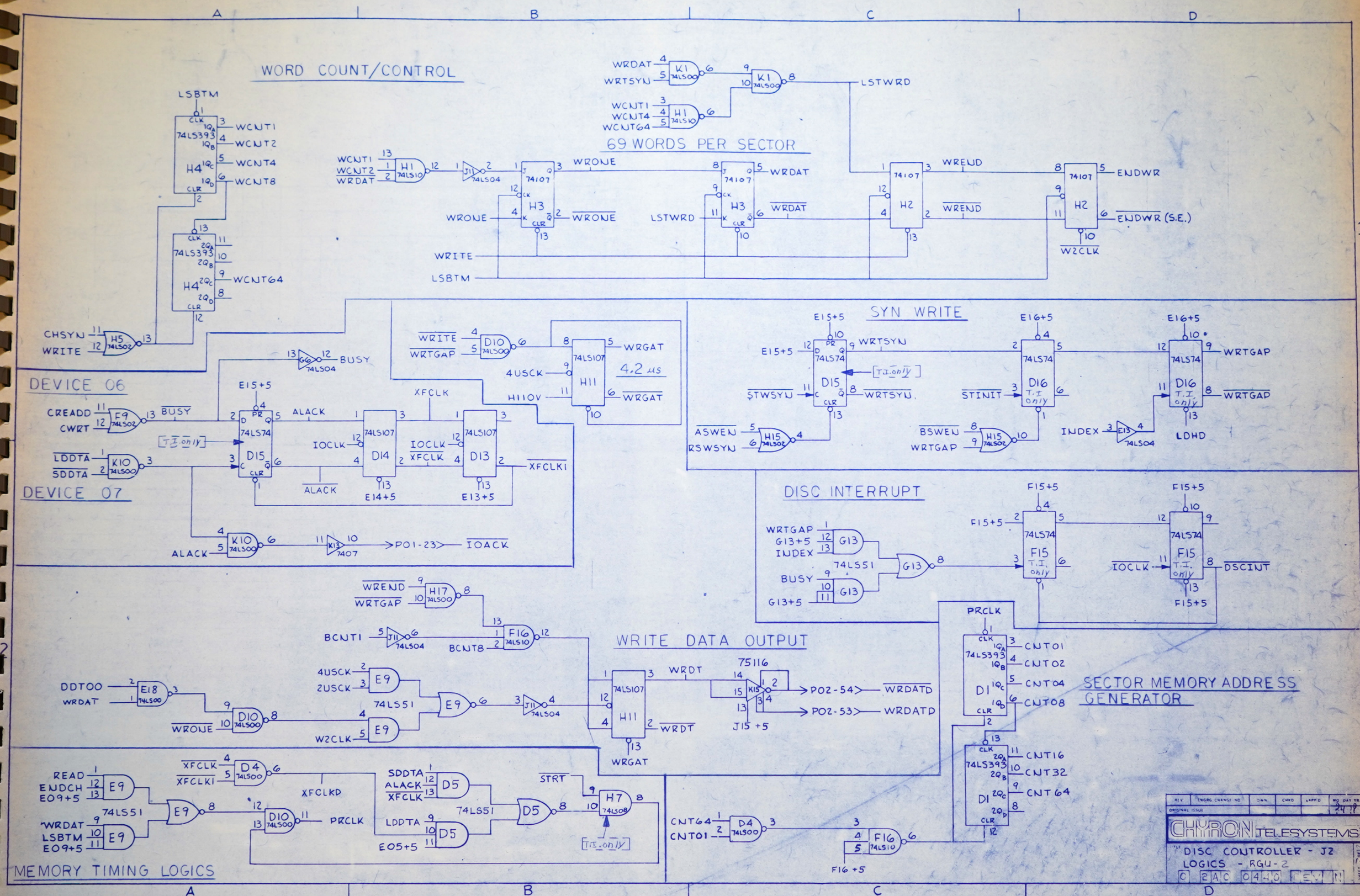
WORD COUNT/CONTROL
69 WORDS PER SECTOR
SYN WRITE
DEVICE 06
DEVICE 07
DISC INTERRUPT
WRITE DATA OUTPUT
SECTOR MEMORY ADDRESS GENERATOR
MEMORY TIMING LOGICS
4.2 µs
CHYRON TELESYSTEMS
DISC CONTROLLER - J2
LOGICS - RGU-2

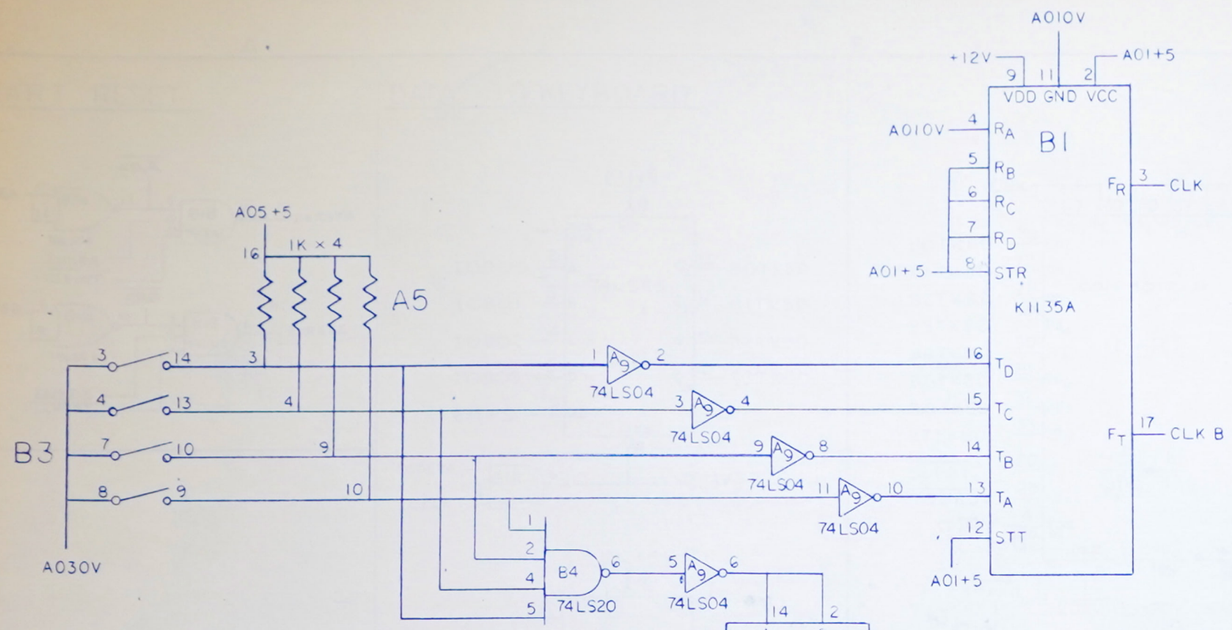

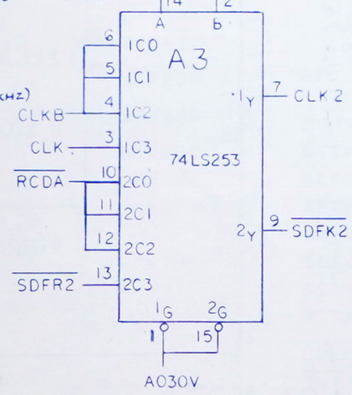

BAUD RATE GENERATOR

DIP SWITCH B3 POLE 6 7 4 3	BAUD RATE	SOURCE	FREQUENCY(KHZ)
0 0 0 0	(9600)	CHYRON	.8KHZ
0 0 0 1	75	RS232	1.2
0 0 1 0	110	RS232	1.76
0 0 1 1	134.5	RS232	2.1523
0 1 0 0	150	RS232	2.4
0 1 0 1	300	RS232	4.8
0 1 1 0	600	RS232	9.6
0 1 1 1	1200	RS232	19.2
1 0 0 0	1800	RS232	28.8
1 0 0 1	2000	RS232	32.081
1 0 1 0	2400	RS232	38.4
1 0 1 1	3600	RS232	57.6
1 1 0 0	4800	RS232	76.8
1 1 0 1	7200	RS232	115.2
1 1 1 0	9600	RS232	153.6
1 1 1 1	19200	RS232	316.8KHZ

REV	ENGRG CHANGE NO.	DWN	CHKD	APP'D.	MO. DAY YR.
ORIGINAL ISSUE		F N			10-8-81

CHYRON TELESYSTEMS 265 Spagnoli Road Melville, New York 11747

TITLE
DISC CONTROLLER LOGIC
J2 RGU-2

C 240 0440 REV N

SHEET 21 of 28

UART RESET

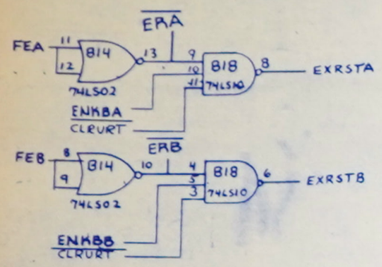

DATA TO KEYBOARD

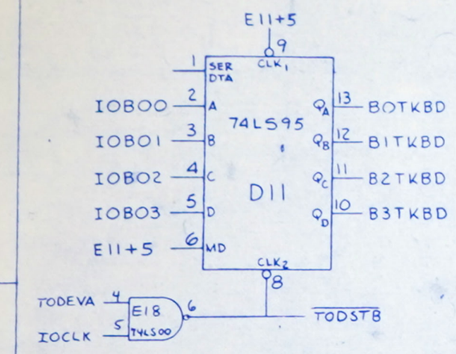

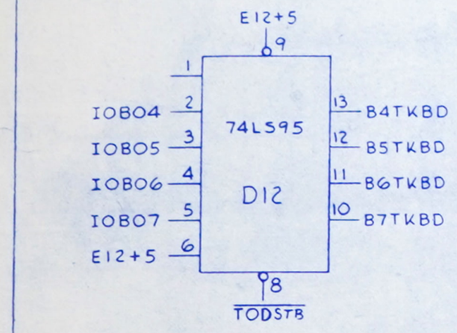

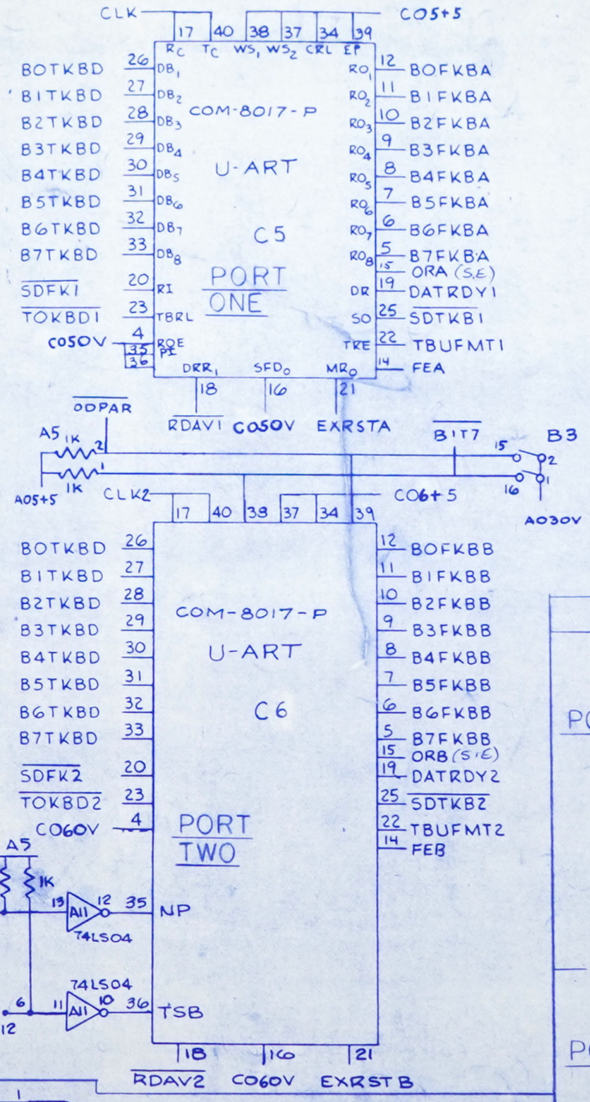

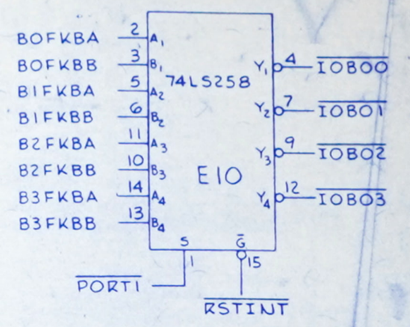

DATA FROM KEYBOARD

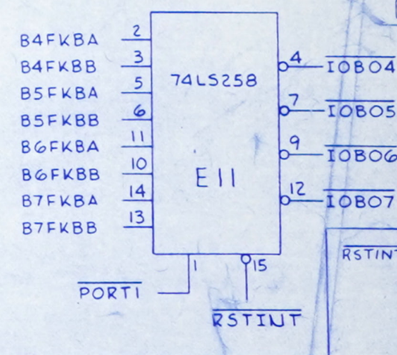

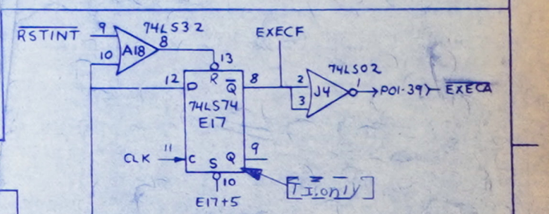

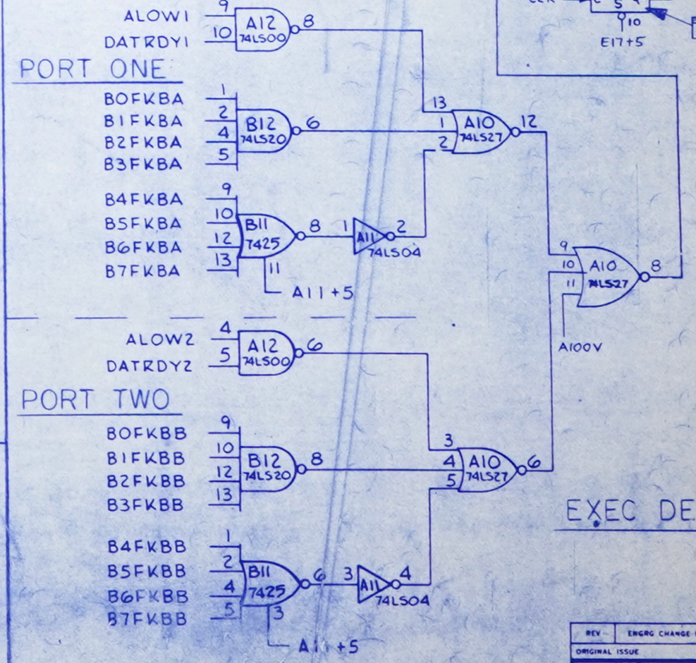

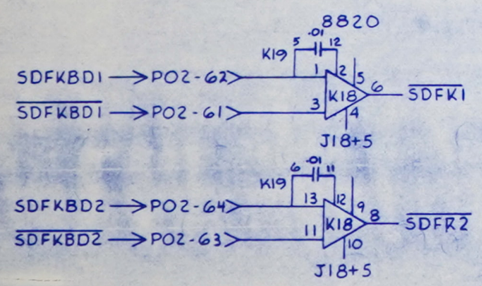

DATA FROM KEYBOARD

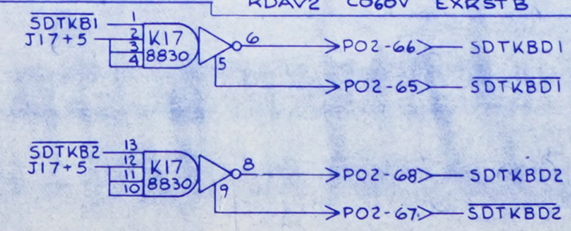

DATA TO KEYBOARD

REV	ENGRG CHANGE NO.	DWN	CHKD		MO DAY YR
ORIGINAL ISSUE					8 4 78

CHYRON TFI FSYSTEMS

TITLE: DISC CONTROLLER - J2
LOGICS -CHYRON IV RGU-2

0 2 A 0 0 4 4 0 REV N

SHEET 2 OF 2

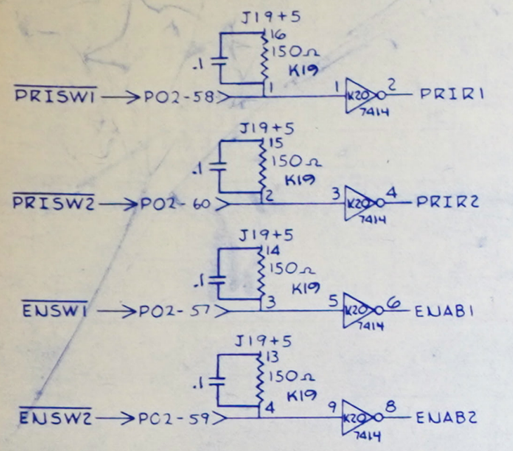

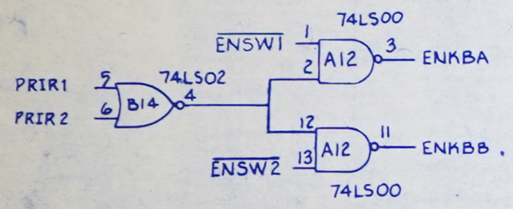

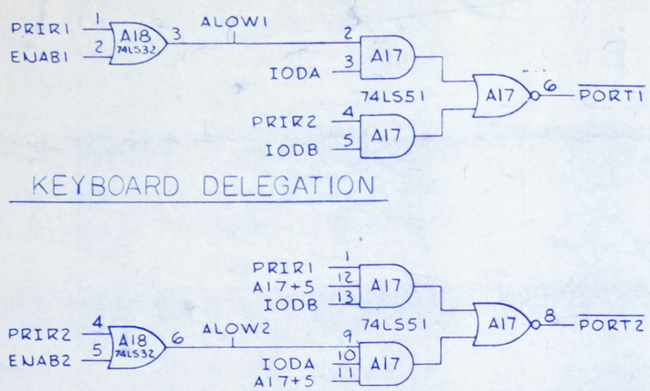

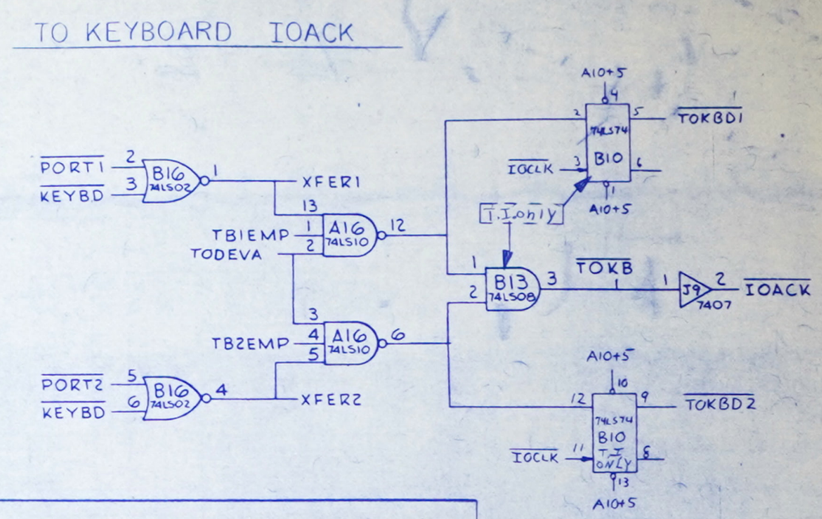

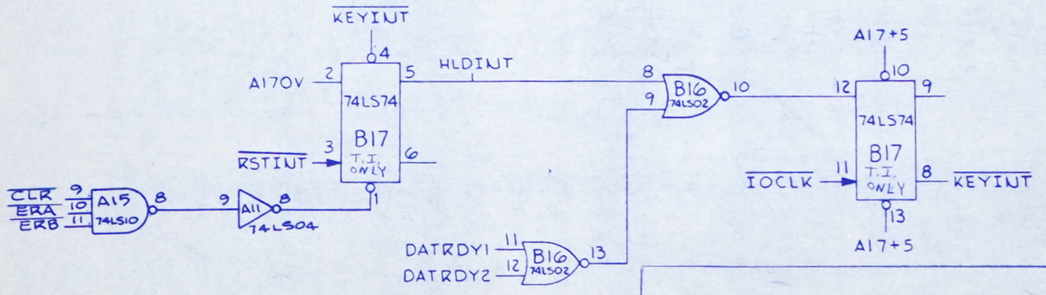

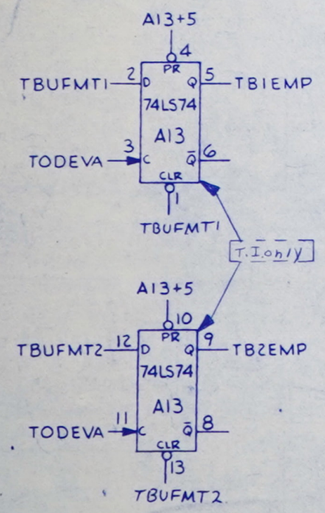

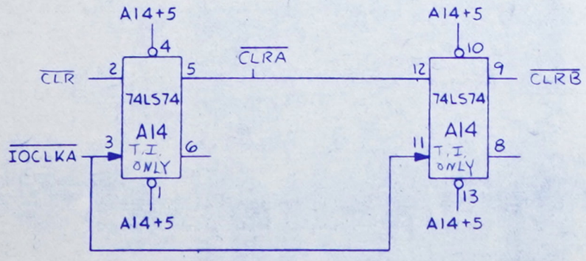

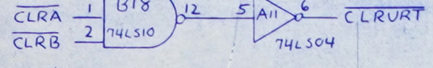

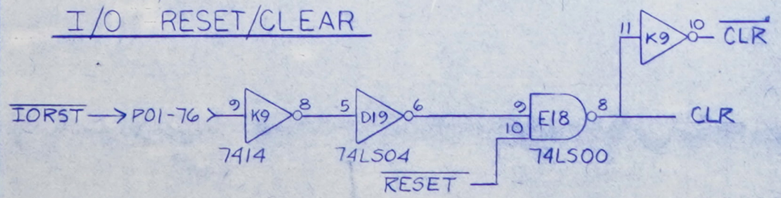

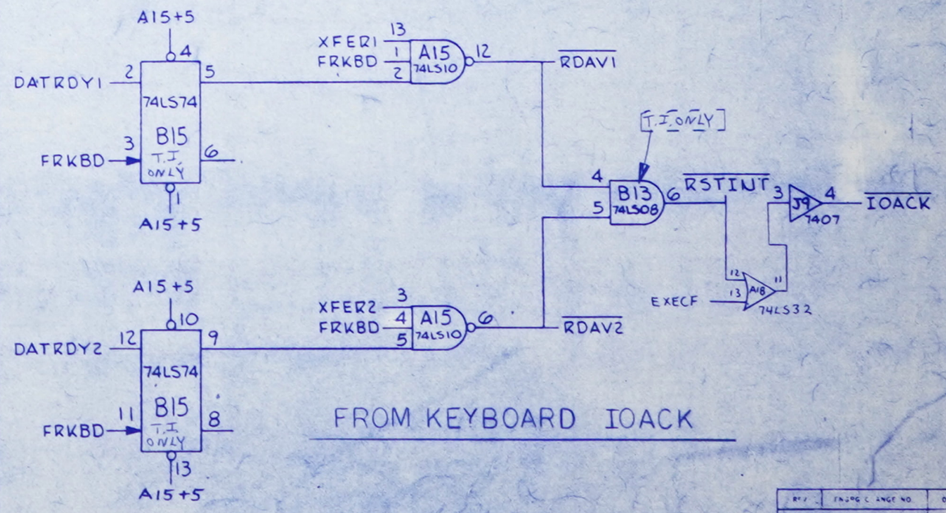

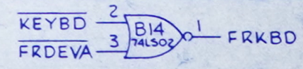

CHYRON TELESYSTEMS
DISC CONTROLLER - J2
LOGICS -CHYRON RGU-2
C 2A0 0440 REV N

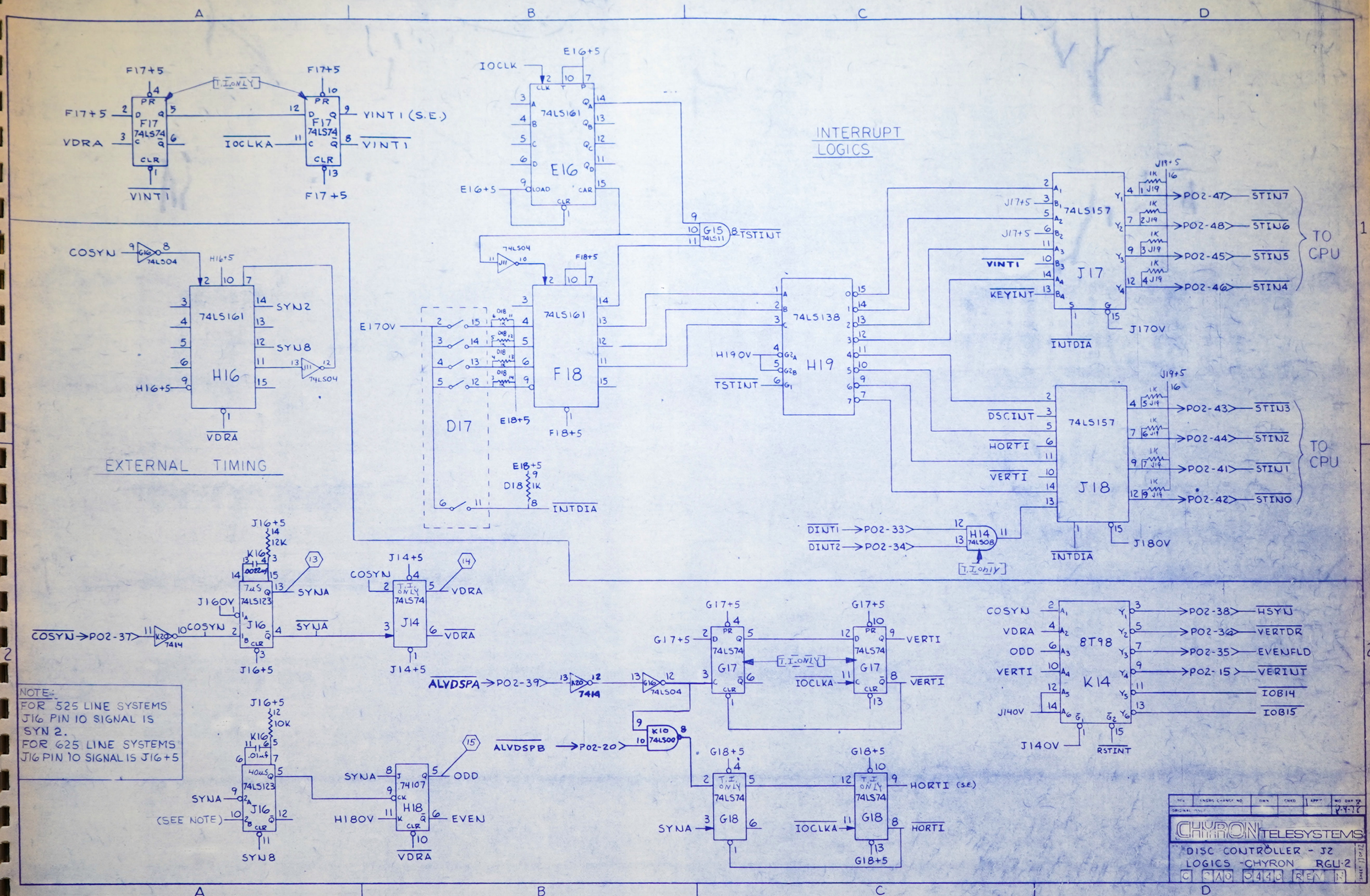
INTERRUPT LOGICS
EXTERNAL TIMING
F17+5
VDRA
VINT1
VINT1 (S.E.)
IOCLKA
IOCLK
E16+5
74LS161
E16
TSTINT
74LS04
F18+5
E170V
D17
E18+5
F18
74LS138
H19
H19OV
74LS157
J17
J17+5
KEYINT
INTDIA
J170V
J19+5
PO2-47
PO2-48
PO2-45
PO2-46
STIN7
STIN6
STIN5
STIN4
TO CPU
J18
DSCINT
HORTI
VERTI
PO2-43
PO2-44
PO2-41
PO2-42
STIN3
STIN2
STIN1
STIN0
J180V
DINT1
DINT2
PO2-33
PO2-34
H14
74LS08
T.I. only
COSYN
H16
SYN2
SYN8
H16+5
J16+5
J16
74LS123
J160V
SYNA
COSYN
PO2-37
J14+5
J14
74LS74
G17+5
G17
ALVDSPA
PO2-39
74LS04
ALVDSPB
PO2-20
K10
74LS00
G18+5
G18
HORTI (S.E.)
8T98
K14
ODD
VERTI
J140V
RSTINT
PO2-38
PO2-36
PO2-35
PO2-15
HSYN
VERTDR
EVENFLD
VERINT
IOB14
IOB15
74107
H18
H180V
EVEN
(SEE NOTE)
NOTE:
FOR 525 LINE SYSTEMS J16 PIN 10 SIGNAL IS SYN 2.
FOR 625 LINE SYSTEMS J16 PIN 10 SIGNAL IS J16+5
CHYRON TELESYSTEMS
DISC CONTROLLER - J2
LOGICS - CHYRON RGU-2

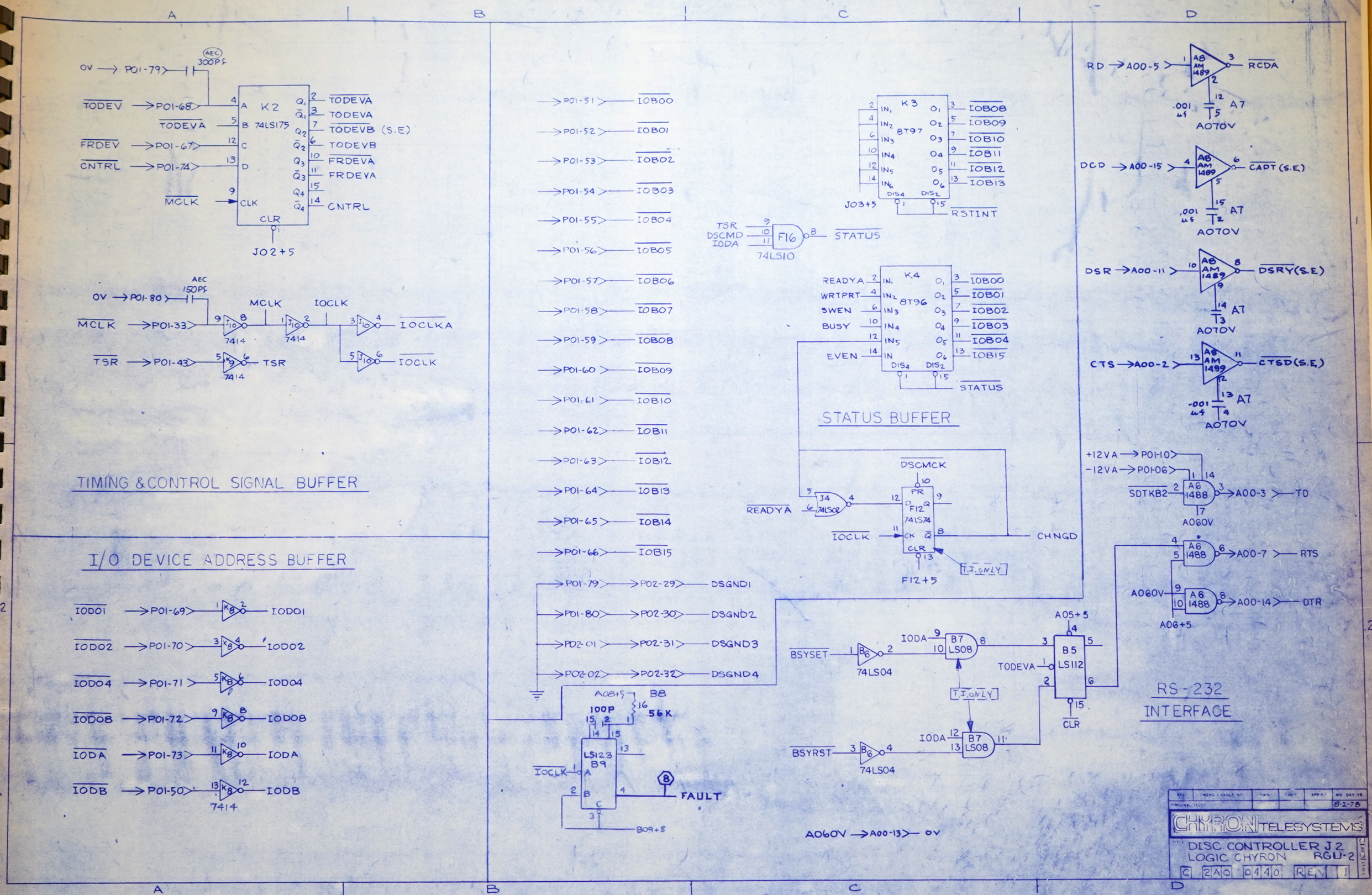

TIMING & CONTROL SIGNAL BUFFER
I/O DEVICE ADDRESS BUFFER
STATUS BUFFER
RS-232 INTERFACE
K2 74LS175
J02+5
K3 8T97
J03+5
K4 8T96
F16 74LS10
F12 74LS74
F12+5
J4 74LS02
LS123 B9
B8 56K
B5 LS112
B7 LS08
74LS04
A060V → A00-13 → 0V
FAULT
CHYRON TELESYSTEMS
DISC CONTROLLER J2
LOGIC CHYRON RGU-2
C 2A0 0440 REV 1
8-2-78

SHIFT LINKAGE

ARITHMETIC/LOGIC UNIT & GENERAL PURPOSE REGISTERS

SHIFT TABLE

I7= 1=UP

S1	S0	
0	0	ERL
0	1	LSL
1	0	LRL
1	1	ASL

I7= 0=DOWN

S1	S0	
0	0	ERR
0	1	LSR
1	0	LRR
1	1	ASR

LOOK AHEAD CARRY GENERATE

SPECIAL SET E BIT

E BIT REGISTER

E BIT CONTROL LINES

STATUS REG

TITLE	DWG. NO.	REVISION
ASSEMBLY	2000718	A B C D E F G H J K L M N P R S T U V
SUB-ASSY.	2000719	A A A A A A A A A B C C D D D D E F G H
LOGICS	2000441	A B C D E F G H J K L M N P R S T U V W
TAPE	631	Ø Ø Ø Ø Ø Ø Ø Ø A A A A A A B B B B

REV	CN- 2838	G.A.			3-27-85
P	CN- 2819	R.M.			2-22-85
N	CN- 2756	R.M.			2-22-85
M	CN- 2729	F.M.			1-30-84
L	CN- 2591	F.M.			3-21-84
K	CN- 2315	F.M.			12-21-83
J	CN- 2367	F.M.			10-27-83
H	CN- 2260	F.M.			6-6-83
G	CN- 2191	F.M.			3-14-83
F	CN- 2149	M.S.			2-7-83
E	CN- 2070	D.W.			12-16-82
D	CN- 2009	D.W.			9-23-82
C	CN- 2010	D.W.			9-20-82
B	CN- 825	M.S.			1-25-82
A	CN- 1933	F.M.			5-24-82

REV	ENGRG CHANGE NO	DWN	CHKD	APP'D	NO. DWY YR.
ORIGINAL ISSUE					

W	CN 3139	VS	RZ		9-29-86
V	CN-2952	F.M.			7-3-85
U	CN-2911	R.M.			7-17-85
T	CN-2860	F.M.			6-24-85
S	CN-2845	F.M.			4-19-85
	CHANGE NOTICE	DWN	CHKD	APP'D	DATE

TELESYSTEMS

TITLE: CPU - J3 RGU 2 LOGICS -

G 2 10 0

SHEET 1/11

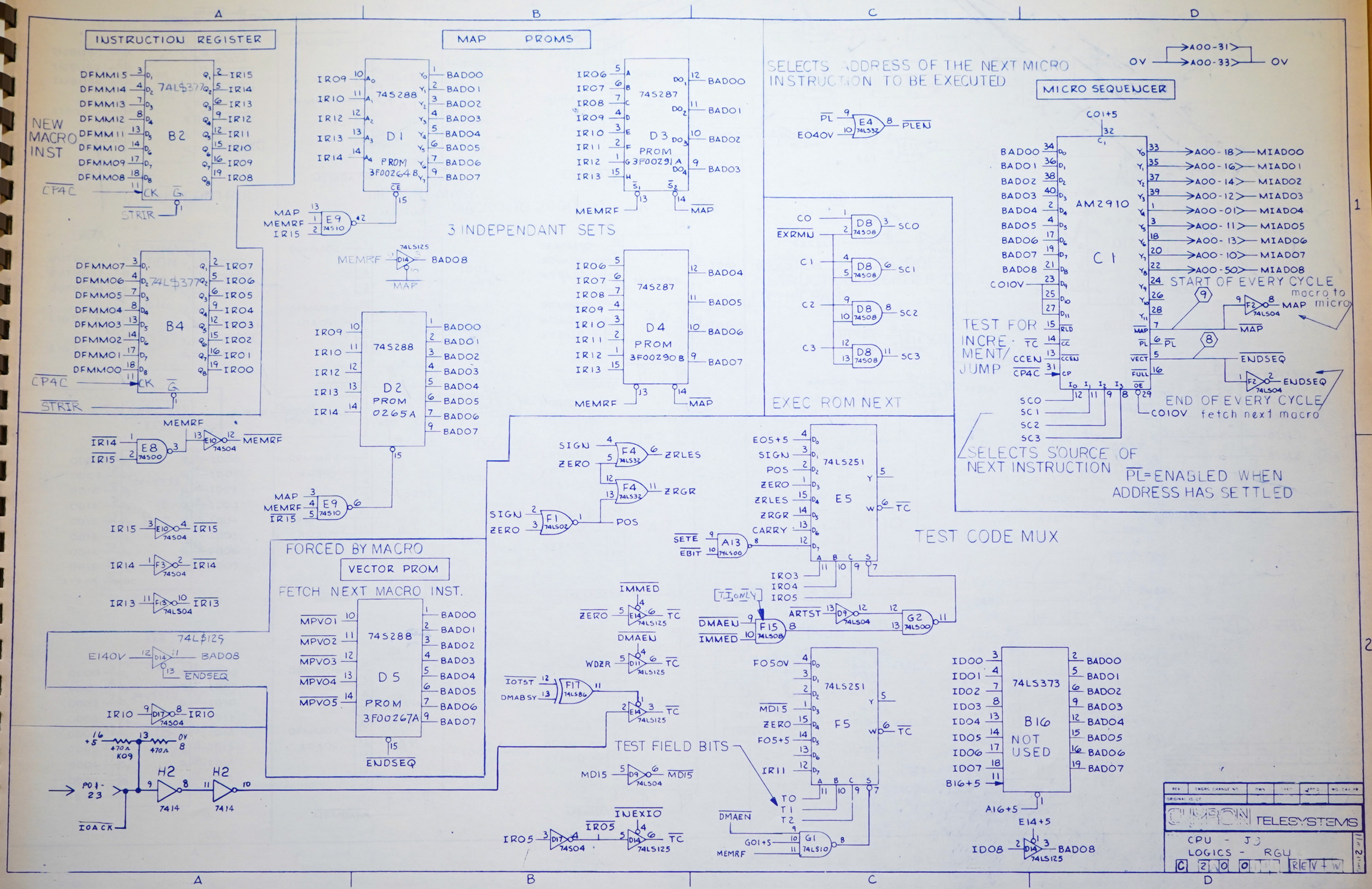

INSTRUCTION REGISTER
NEW MACRO INST
74LS377 B2
74LS377 B4
MAP PROMS
74S288 D1 PROM 3F00264B
74S287 D3 PROM 3F00291A
74S287 D4 PROM 3F00290B
74S288 D2 PROM 0265A
3 INDEPENDANT SETS
SELECTS ADDRESS OF THE NEXT MICRO INSTRUCTION TO BE EXECUTED
MICRO SEQUENCER
AM2910 C1
START OF EVERY CYCLE
macro to micro
TEST FOR INCREMENT/JUMP
END OF EVERY CYCLE
fetch next macro
EXEC ROM NEXT
SELECTS SOURCE OF NEXT INSTRUCTION
PL=ENABLED WHEN ADDRESS HAS SETTLED
74LS251 E5
TEST CODE MUX
FORCED BY MACRO
VECTOR PROM
FETCH NEXT MACRO INST.
74S288 D5 PROM 3F00267A
74LS125
TEST FIELD BITS
74LS251 F5
74LS373 B16 NOT USED
CUYRON TELESYSTEMS
CPU - J3
LOGICS - RGU

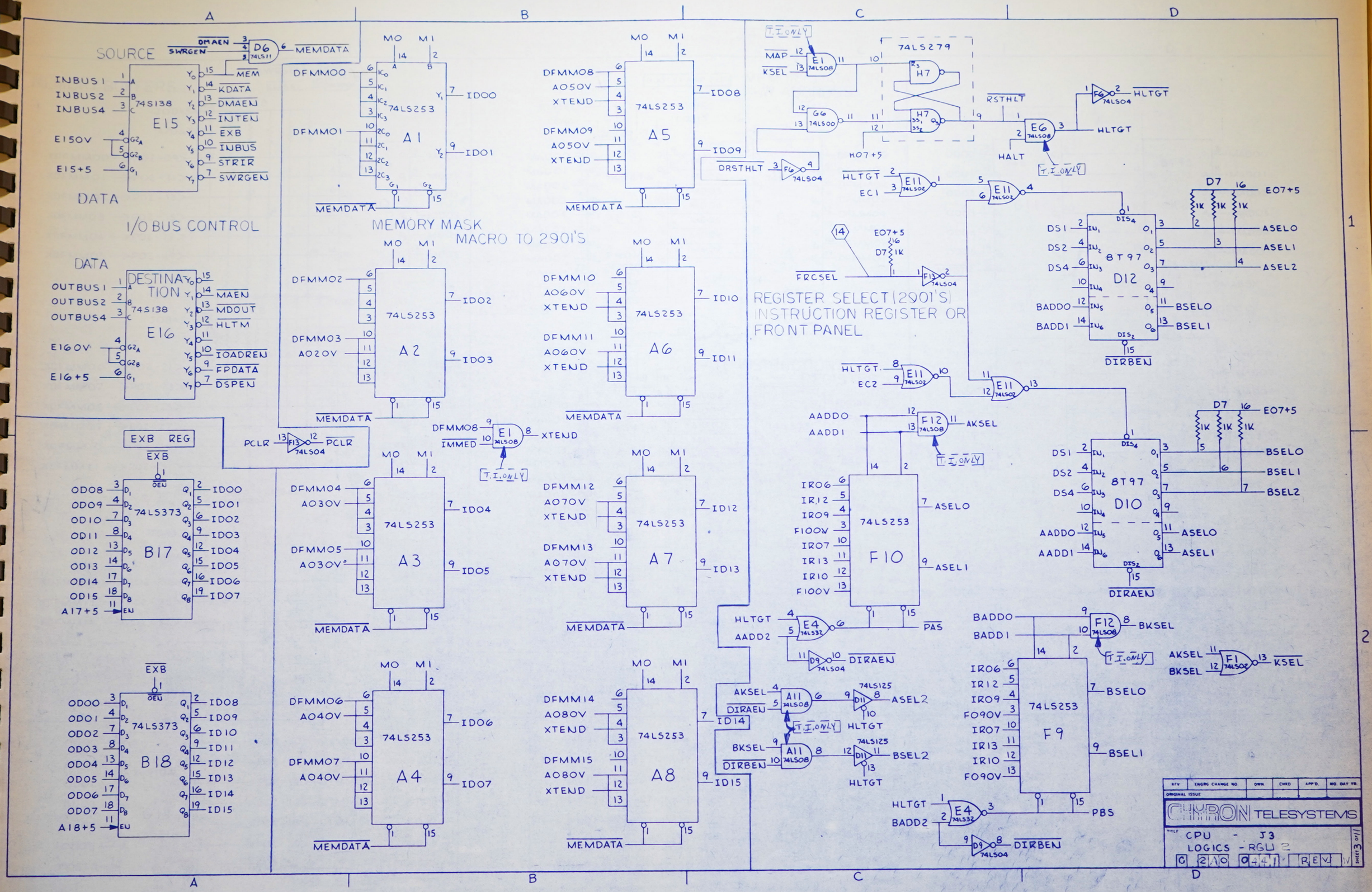
SOURCE
DATA
I/O BUS CONTROL
DESTINATION
MEMORY MASK
MACRO TO 2901'S
REGISTER SELECT (2901'S)
INSTRUCTION REGISTER OR
FRONT PANEL
EXB REG
74LS279
74LS253
74LS373
74S138
74LS08
74LS02
74LS04
74LS11
74LS32
74LS125
8T97
D6
D7
D10
D12
E15
E16
B17
B18
A1
A2
A3
A4
A5
A6
A7
A8
F9
F10
F12
F13
E1
E4
E6
E11
G6
H7
F6
F1
A11
D11
D9
T.I. ONLY
CHYRON TELESYSTEMS
CPU - J3
LOGICS - RGU 2
C 2A0 0441 REV
SHEET 3 OF 11

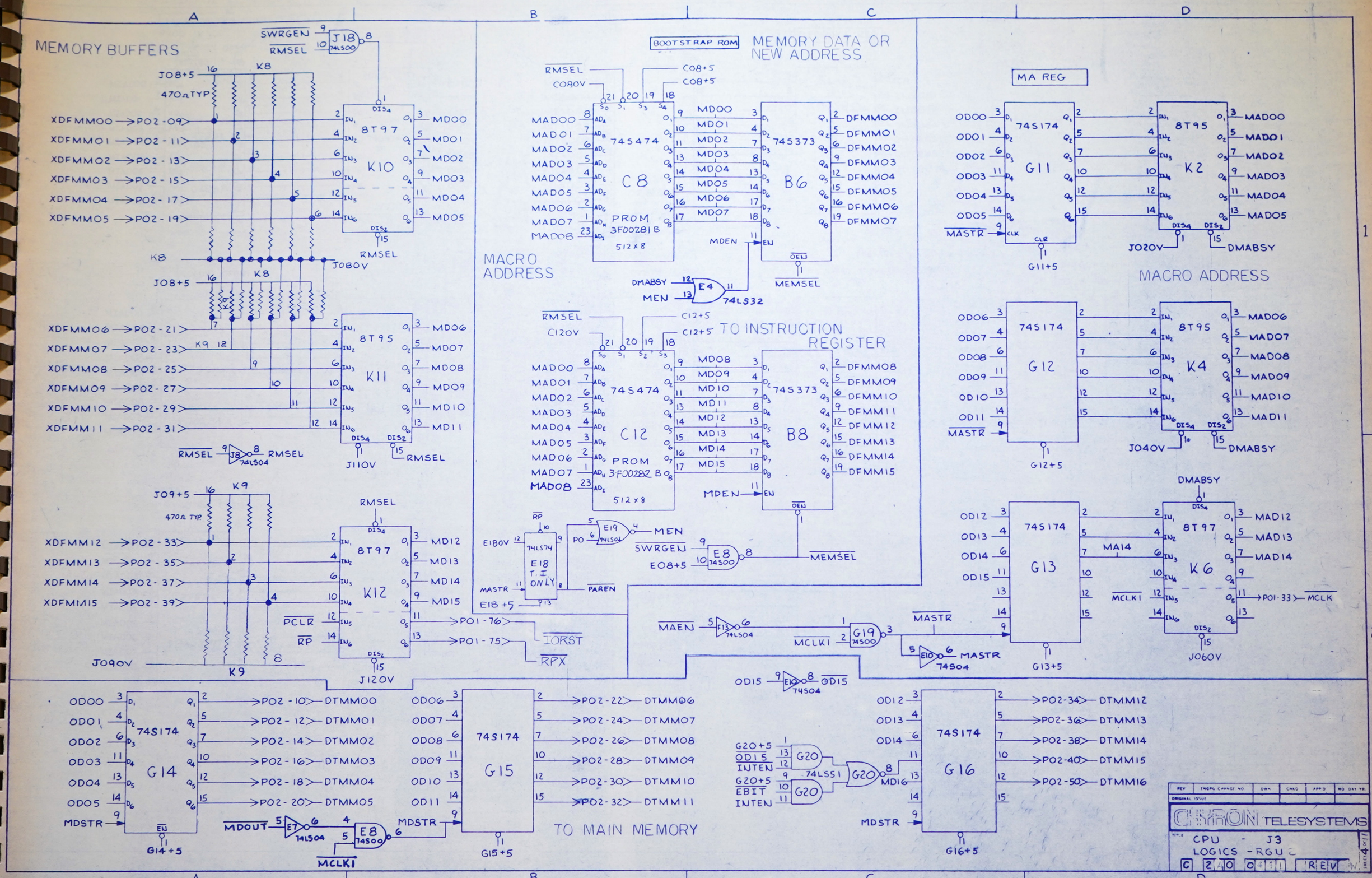
MEMORY BUFFERS
MEMORY DATA OR NEW ADDRESS
BOOTSTRAP ROM
MA REG
MACRO ADDRESS
TO INSTRUCTION REGISTER
TO MAIN MEMORY
8T97 K10
8T95 K11
8T97 K12
74S474 C8 PROM 3F00281B 512x8
74S373 B6
74S474 C12 PROM 3F00282B 512x8
74S373 B8
74S174 G11
8T95 K2
74S174 G12
8T95 K4
74S174 G13
8T97 K6
74S174 G14
74S174 G15
74S174 G16
74LS32
74LS74 E18 T.I. ONLY
74LS51
74S00
74S04
CHYRON TELESYSTEMS
CPU - J3
LOGICS - RGU 2
C 2A0 0441 REV

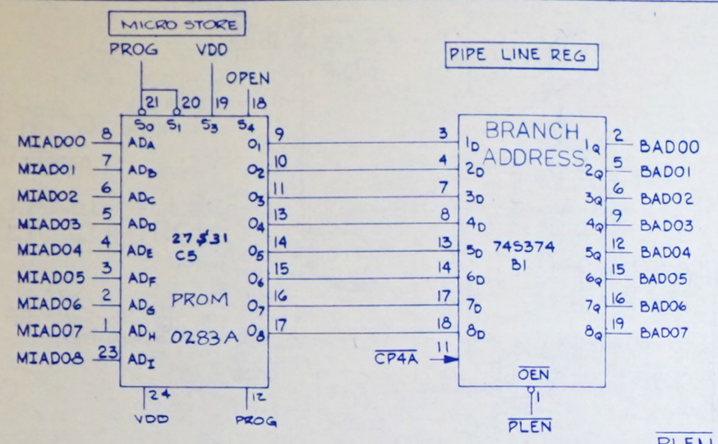

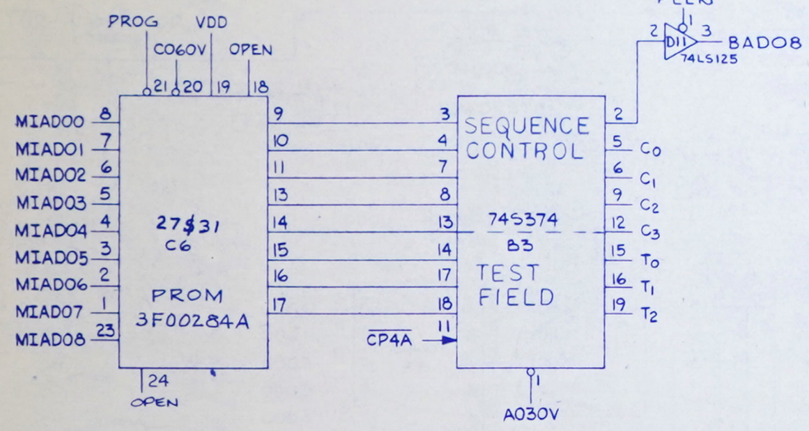

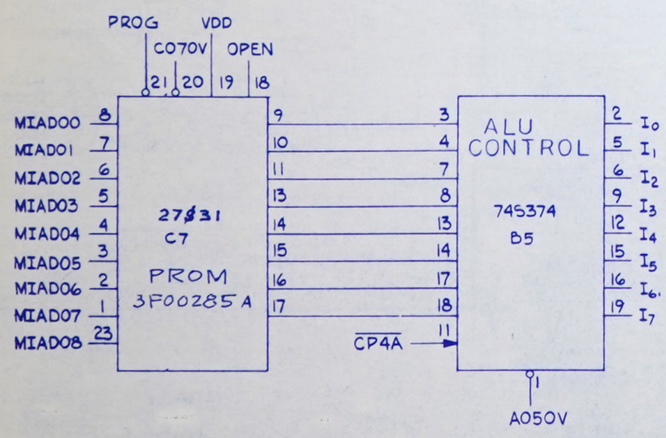

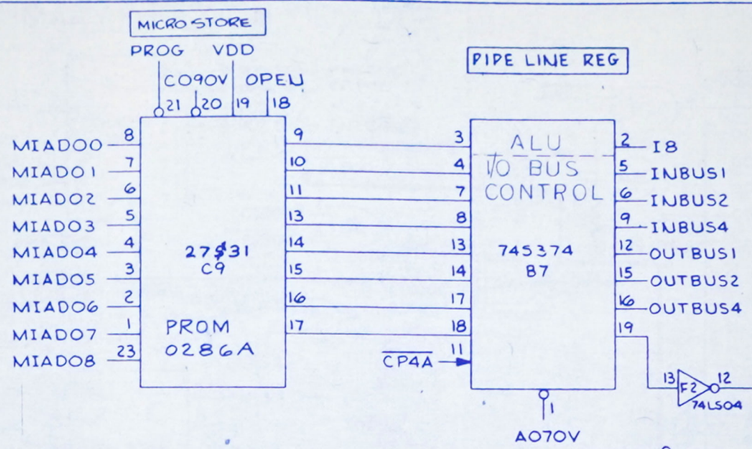

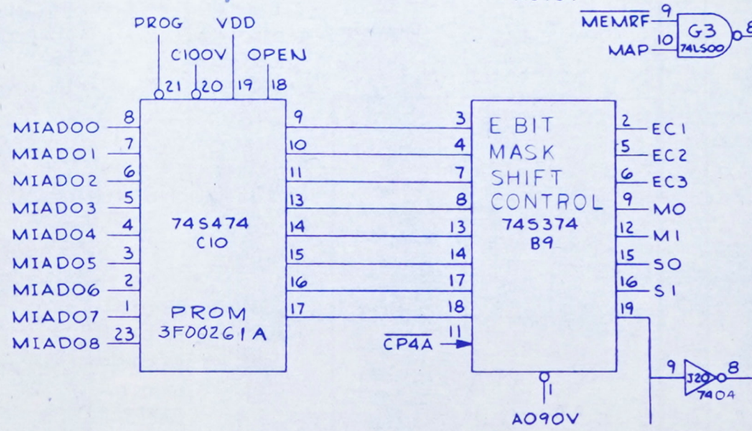

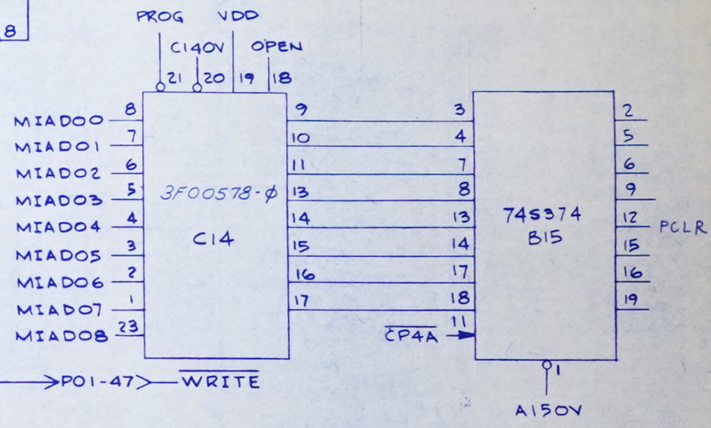

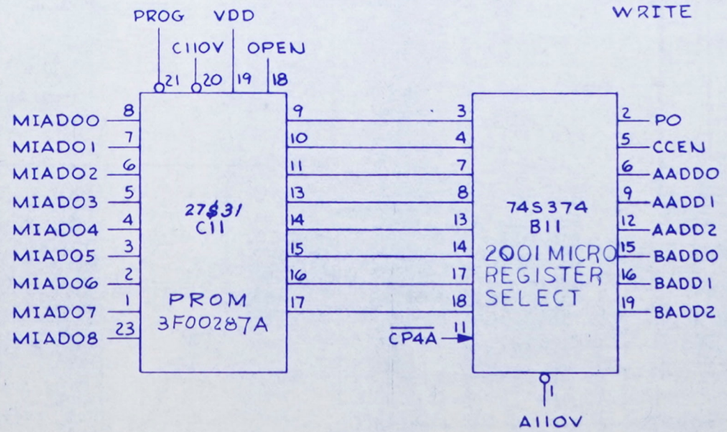

PROG = GROUND VDD & OPEN = +5 VDC

REV	ENGRG CHANGE NO	DWN	CHKD	APP'D	MO. DAY YR.
ORIGINAL ISSUE					

CHYRON TELESYSTEM

TITLE CPU - J3
LOGICS - RGU 2

C 2A0 04 4 1 REV

SHT 5 OF 11

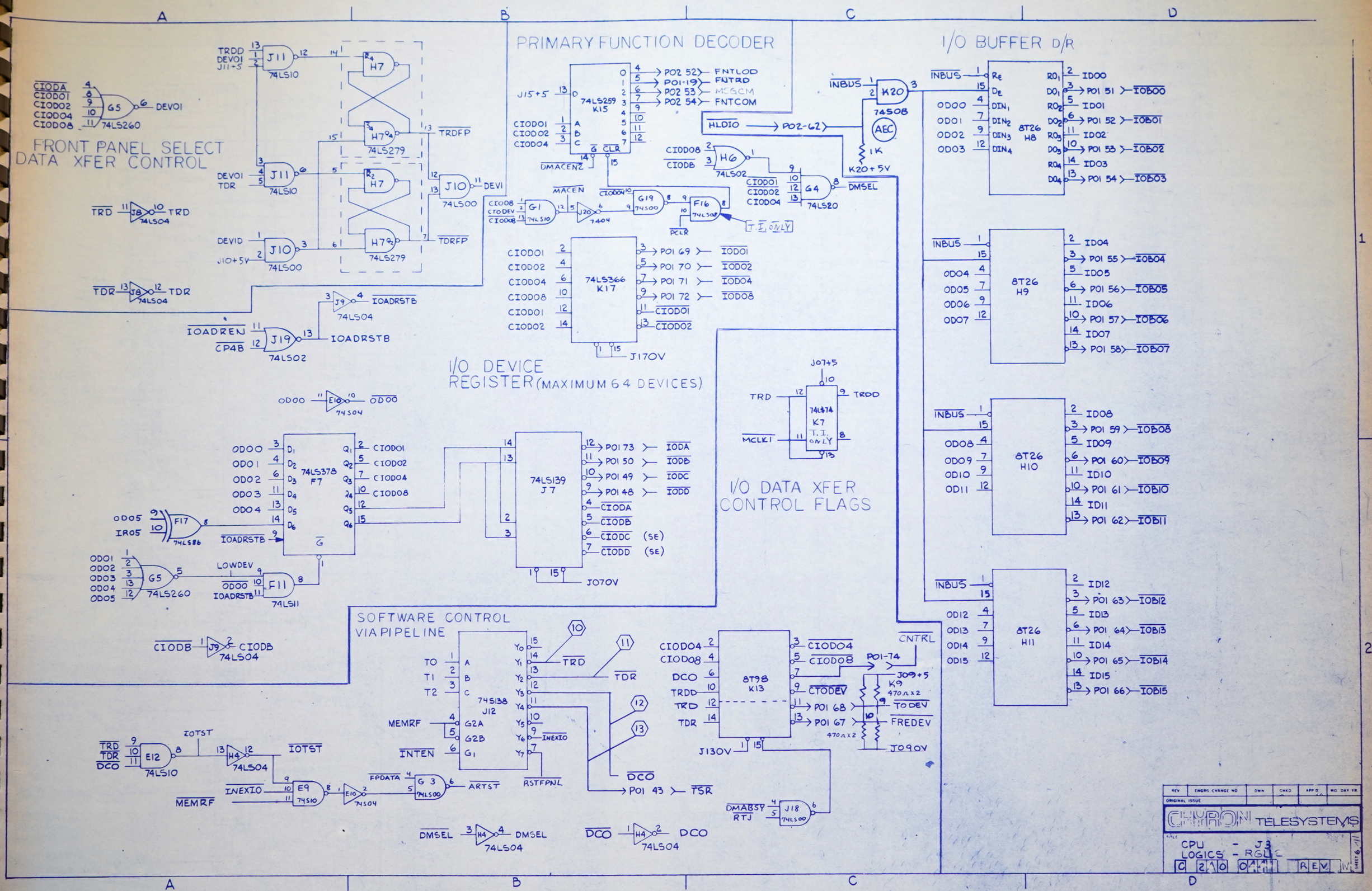
PRIMARY FUNCTION DECODER
I/O BUFFER D/R
FRONT PANEL SELECT
DATA XFER CONTROL
I/O DEVICE
REGISTER (MAXIMUM 64 DEVICES)
I/O DATA XFER
CONTROL FLAGS
SOFTWARE CONTROL
VIA PIPELINE
74LS260 G5
74LS10 J11
74LS279 H7
74LS00 J10
74LS04 J8
74LS02 J19
74LS04 J9
74LS259 K15
74LS366 K17
74LS378 F7
74LS139 J7
74LS86 F17
74LS11 F11
74LS74 K7
74LS02 H6
74LS20 G4
74LS08 F16
74LS04 G1
7404 J20
74LS00 G19
74LS00 G3
74LS10 E9
74LS10 E12
74LS04 H4
74LS138 J12
8T98 K13
74LS00 J18
74S08 K20
8T26 H8
8T26 H9
8T26 H10
8T26 H11
CHYRON TELESYSTEMS
CPU - J3
LOGICS - RGUC

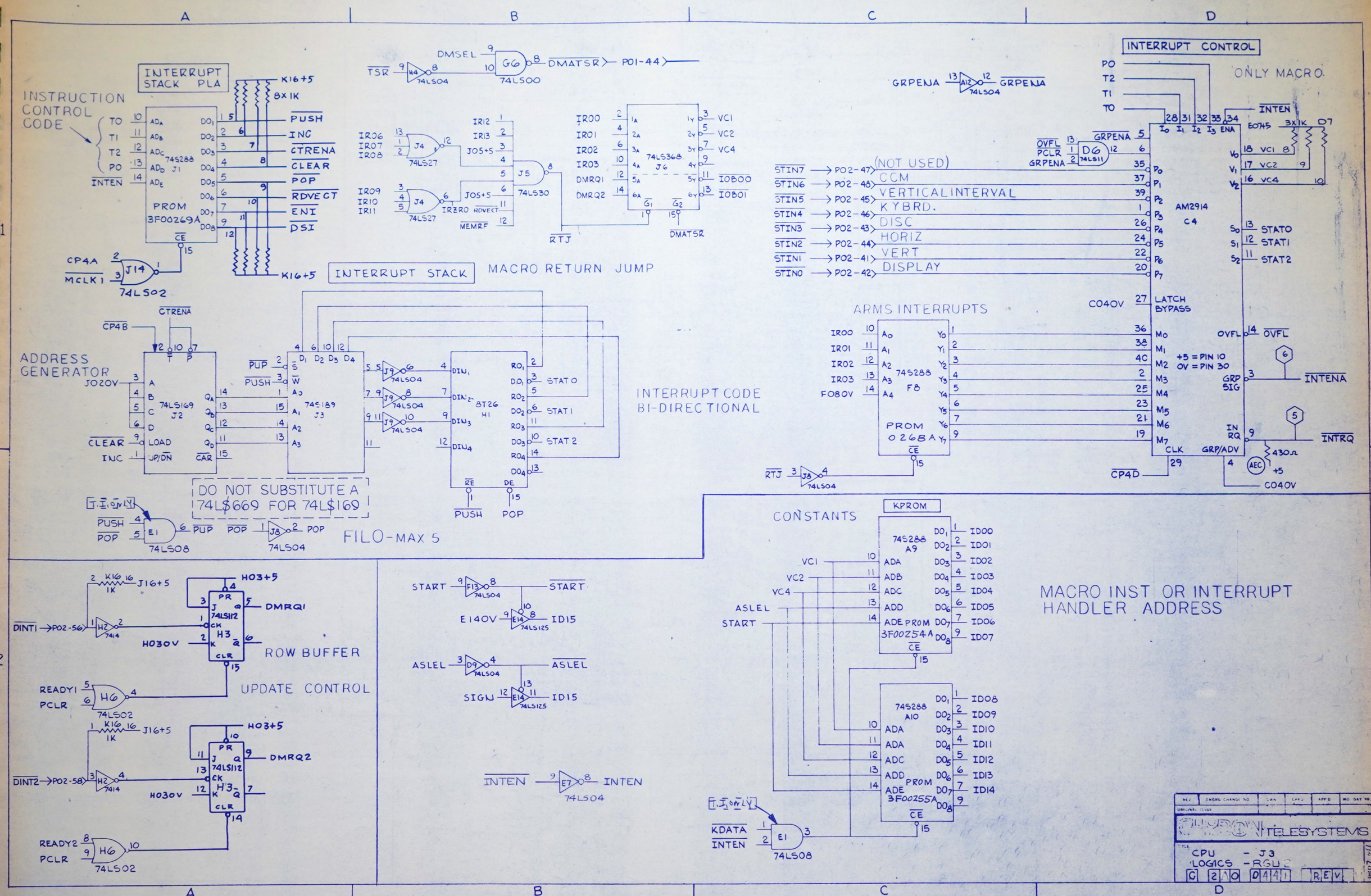

INTERRUPT STACK PLA
INSTRUCTION CONTROL CODE
PROM 3F00269A
74S288 J1
K16+5
8X1K
PUSH
INC
CTRENA
CLEAR
POP
RDVECT
ENI
DSI
CP4A
MCLK1
74LS02
DMSEL
TSR
74LS04
74LS00
DMATSR
P01-44
74LS27
74LS30
74LS368 J6
VC1
VC2
VC4
IOB00
IOB01
RTJ
INTERRUPT STACK
MACRO RETURN JUMP
INTERRUPT CONTROL
ONLY MACRO
GRPENA
INTEN
AM2914 C4
(NOT USED)
CCM
VERTICAL INTERVAL
KYBRD.
DISC
HORIZ
VERT
DISPLAY
STAT0
STAT1
STAT2
LATCH BYPASS
C040V
+5 = PIN 10
0V = PIN 30
OVFL
INTENA
INTRQ
GRP SIG
CLK
GRP/ADV
CP4D
ARMS INTERRUPTS
74S288 F8
PROM 0268A
F080V
ADDRESS GENERATOR
74LS169 J2
74S189 J3
8T26 H1
INTERRUPT CODE BI-DIRECTIONAL
DO NOT SUBSTITUTE A 74LS669 FOR 74LS169
FILO-MAX 5
74LS08
74LS04
CONSTANTS
KPROM
74S288 A9
PROM 3F00254A
74S288 A10
PROM 3F00255A
MACRO INST OR INTERRUPT HANDLER ADDRESS
ROW BUFFER
UPDATE CONTROL
74LS112
H03+5
DMRQ1
DMRQ2
H030V
READY1
READY2
PCLR
DINT1
DINT2
START
ASLEL
SIGN
E140V
ID15
KDATA
INTEN
TELESYSTEMS
CPU - J3
LOGICS - RGU 2
C 2A0 0441 REV

DMA LOGICS

DMA CONTROLLER

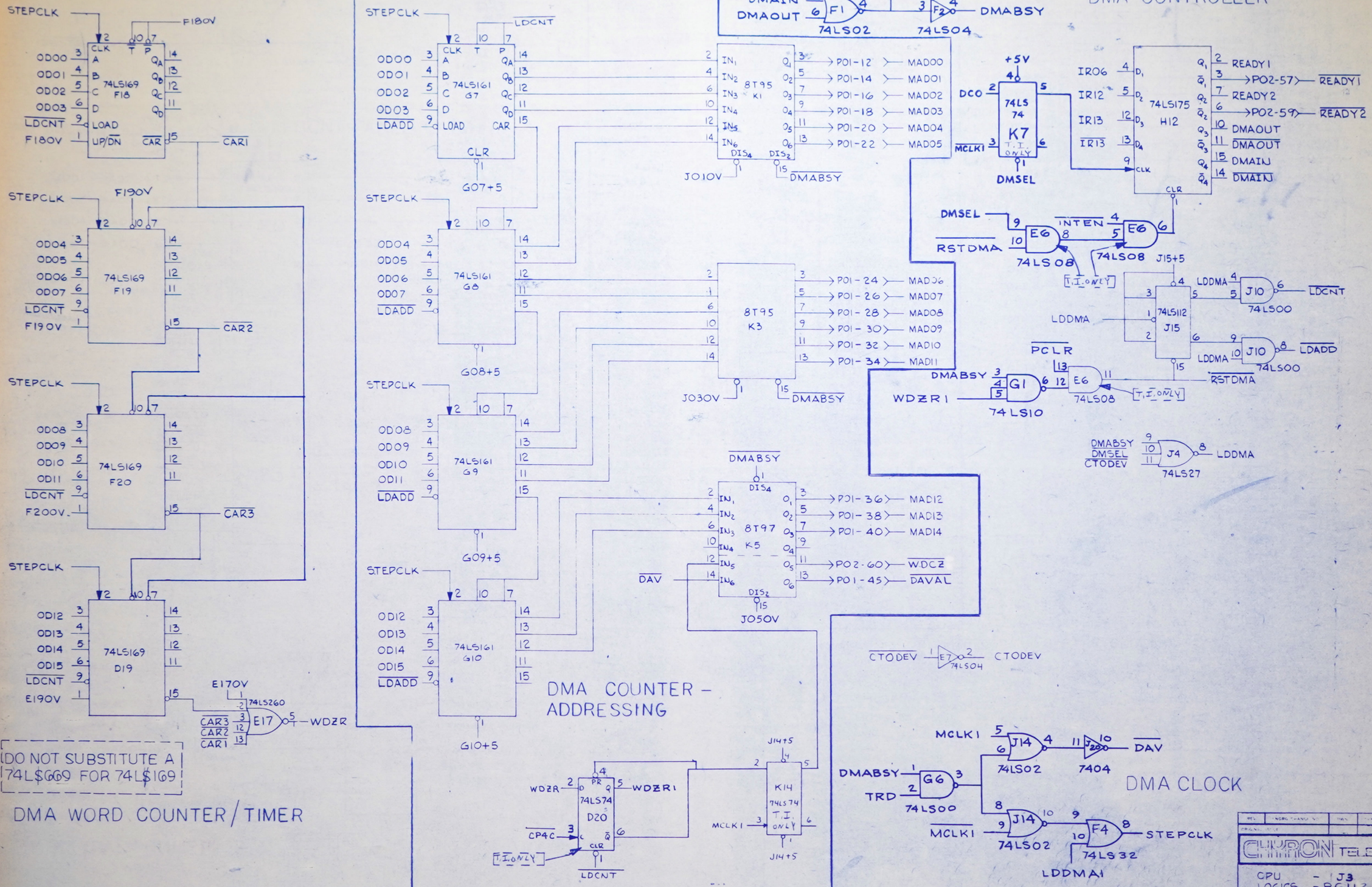

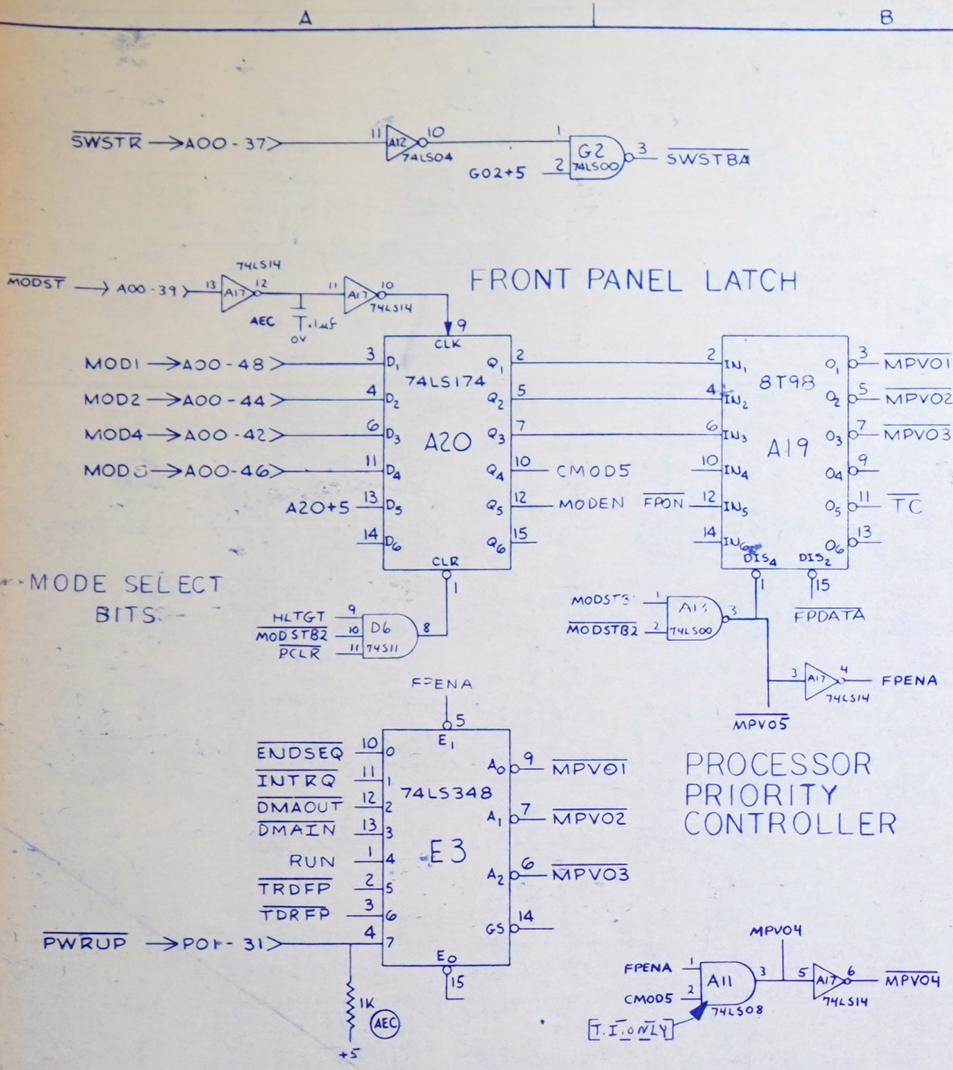

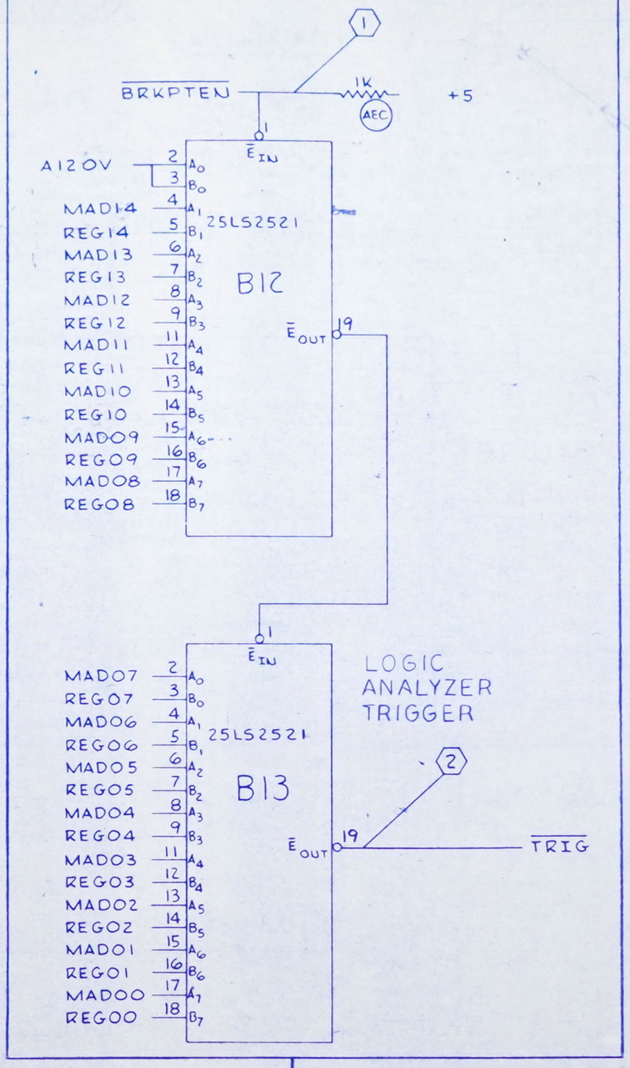

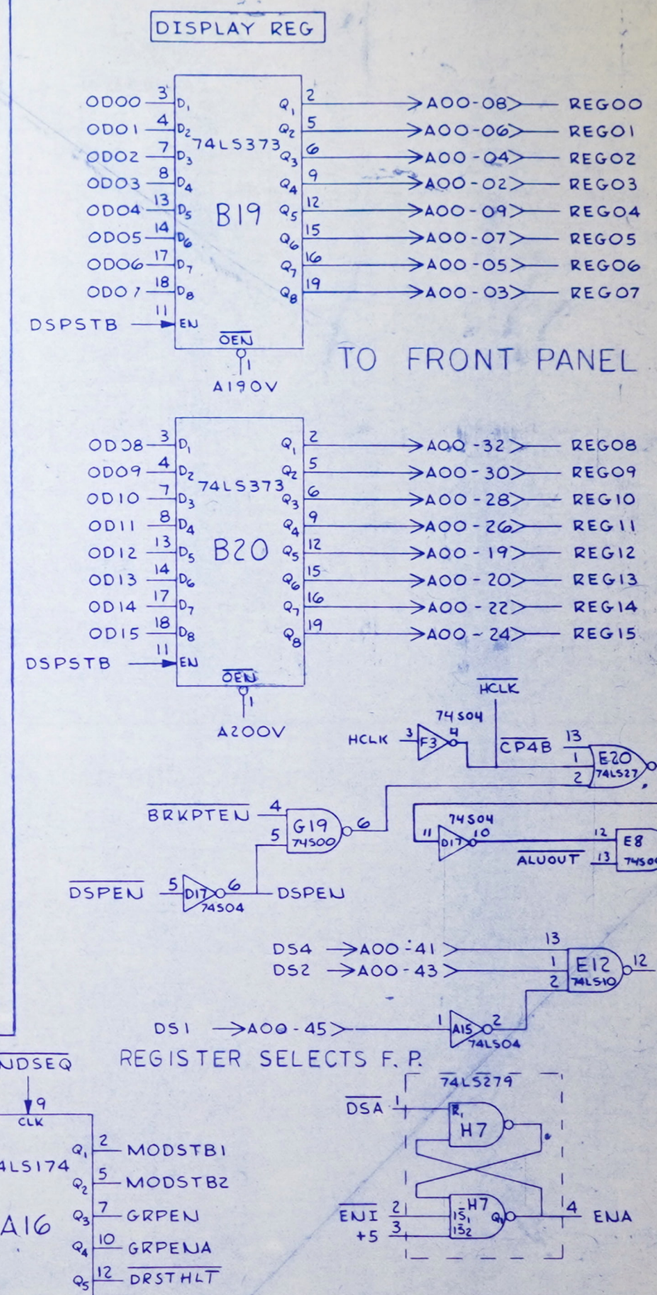

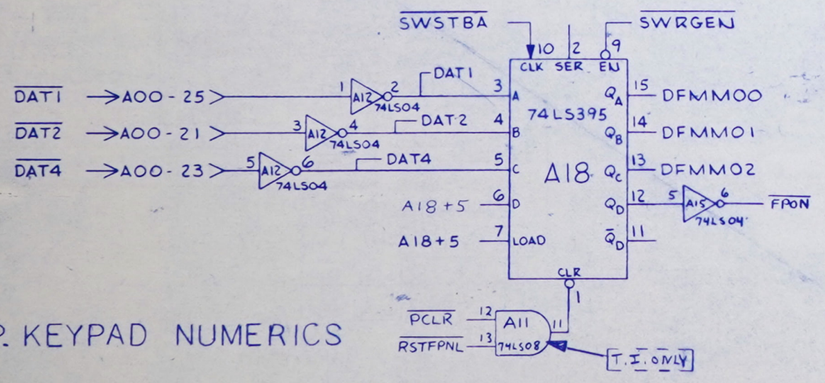

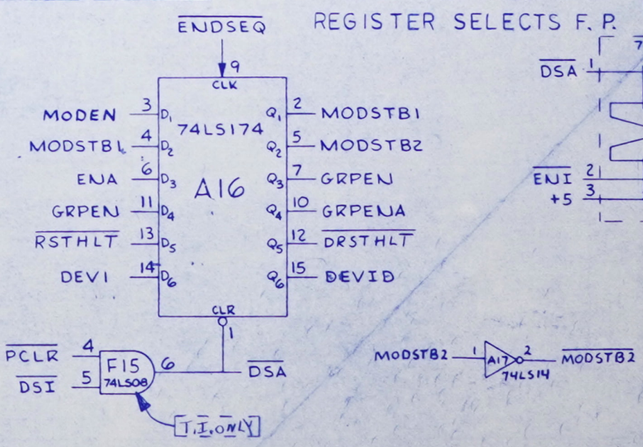

REV	ENGRG CHANGE NO		DWN	CHK	APP'D	MO DAY YR
ORIGINAL ISSUE						

CYBERON TELESYSTEMS

CPU - J3
LOGICS - RGU-2

G 2A0 0441 REV W

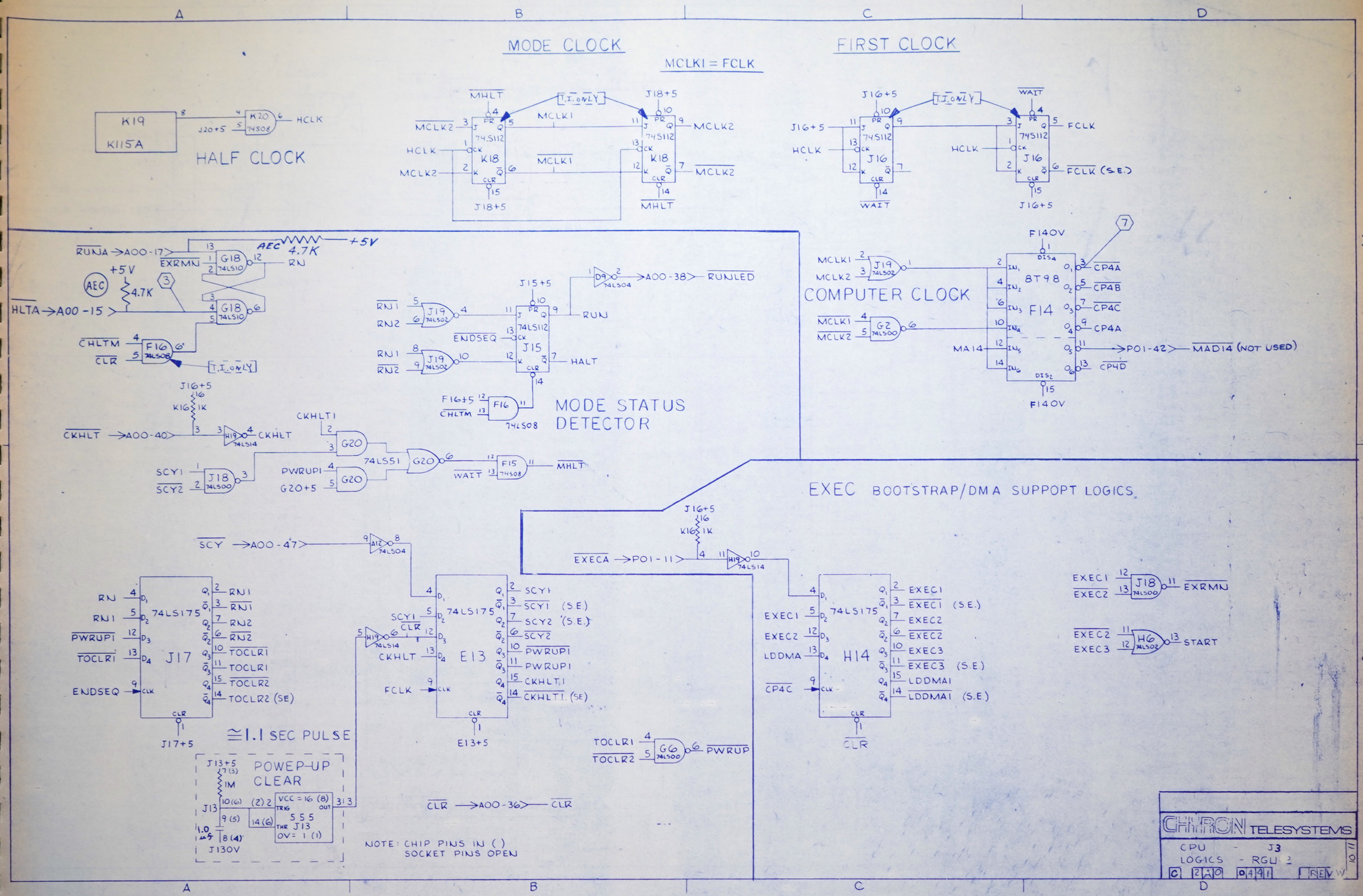
MODE CLOCK
MCLK1 = FCLK
FIRST CLOCK
HALF CLOCK
K19
K115A
K20
74S08
HCLK
J20+5
MHLT
MCLK2
MCLK1
74S112
K18
J18+5
T.I. ONLY
J16+5
WAIT
FCLK
FCLK (S.E.)
J16
COMPUTER CLOCK
F140V
8T98
F14
CP4A
CP4B
CP4C
CP4D
MA14
P01-42
MAD14 (NOT USED)
RUNA
A00-17
EXRMN
G18
74LS10
RN
AEC
4.7K
+5V
HLTA
A00-15
CHLTM
CLR
F16
74LS08
J15+5
D9
74LS04
A00-38
RUNLED
RN1
RN2
J19
74LS02
ENDSEQ
J15
RUN
HALT
F16+5
MODE STATUS
DETECTOR
J16+5
K16
1K
CKHLT
A00-40
H19
74LS14
CKHLT1
G20
74LS51
SCY1
SCY2
J18
74LS00
PWRUP1
G20+5
WAIT
F15
MHLT
EXEC BOOTSTRAP/DMA SUPPOPT LOGICS
SCY
A00-47
A12
74LS04
EXECA
P01-11
74LS175
J17
TOCLR1
TOCLR2
ENDSEQ
J17+5
E13
SCY1 (S.E.)
SCY2 (S.E.)
CKHLT1 (SE)
FCLK
E13+5
H14
EXEC1
EXEC2
EXEC3
EXEC3 (S.E.)
LDDMA1
LDDMA1 (S.E.)
CP4C
EXRMN
H6
START
≅1.1 SEC PULSE
POWEP-UP
CLEAR
J13+5
1M
J13
555
J13
J130V
VCC = 16 (8)
OV = 1 (1)
TOCLR1
TOCLR2
G6
PWRUP
CLR
A00-36
NOTE: CHIP PINS IN ( )
SOCKET PINS OPEN
CHYRON TELESYSTEMS
CPU - J3
LOGICS - RGU 2
C 2A0 0441 REV W
10 11

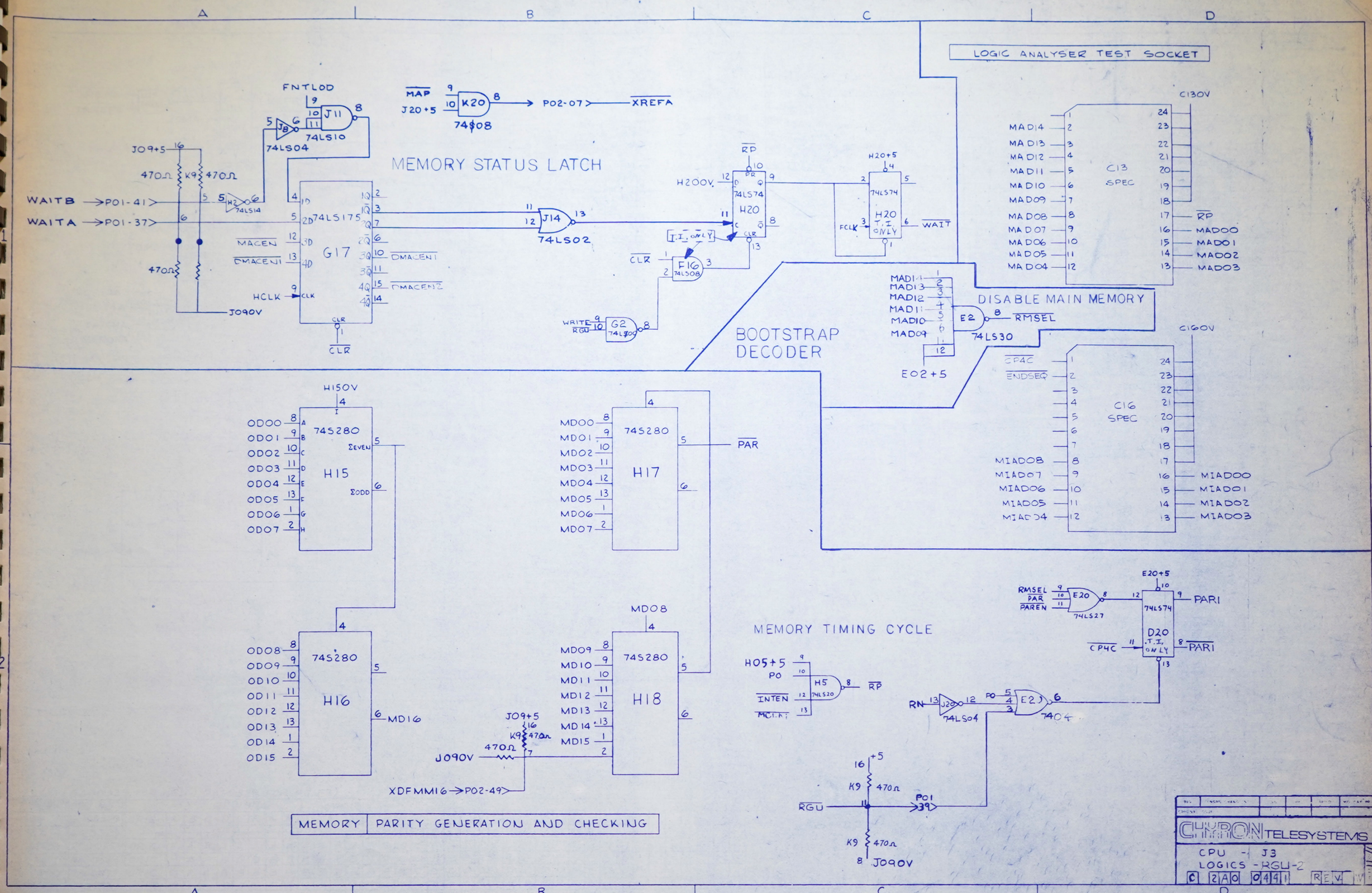

LOGIC ANALYSER TEST SOCKET
MEMORY STATUS LATCH
BOOTSTRAP DECODER
DISABLE MAIN MEMORY
MEMORY TIMING CYCLE
MEMORY | PARITY GENERATION AND CHECKING
WAITB
WAITA
FNTLOD
MAP
J20+5
K20
74S08
P02-07
XREFA
J11
74LS10
J8
74LS04
J09+5
470Ω
K9
H2
74LS14
74LS175
G17
MACEN
DMACEN1
DMACEN2
HCLK
CLR
J090V
J14
74LS02
RP
H200V
74LS74
H20
T.I. ONLY
F16
74LS08
WRITE
RGU
G2
74LS00
H20+5
FCLK
WAIT
C13 SPEC
C130V
MAD14
MAD13
MAD12
MAD11
MAD10
MAD09
MAD08
MAD07
MAD06
MAD05
MAD04
MAD00
MAD01
MAD02
MAD03
E2
74LS30
RMSEL
E02+5
C16 SPEC
C160V
CP4C
ENDSEQ
MIAD08
MIAD07
MIAD06
MIAD05
MIAD04
MIAD00
MIAD01
MIAD02
MIAD03
H150V
74S280
H15
ΣEVEN
ΣODD
OD00
OD01
OD02
OD03
OD04
OD05
OD06
OD07
H16
OD08
OD09
OD10
OD11
OD12
OD13
OD14
OD15
MD16
H17
MD00
MD01
MD02
MD03
MD04
MD05
MD06
MD07
PAR
H18
MD08
MD09
MD10
MD11
MD12
MD13
MD14
MD15
J09+5
J090V
XDFMM16
P02-49
H05+5
PO
INTEN
H5
74LS20
RN
J20
74LS04
E20
74LS27
E20+5
74LS74
D20
PARI
RGU
P01
CHYRON TELESYSTEMS
CPU - J3
LOGICS - RGU-2
C 2A0 0441 REV

(6A00329 FOR RGU-1 6A10329 FOR RGU-2)

TITLE	DWG. NO	REVISION																										
ASSY	6A00329	ORIG	A	B	C	D	E	F	G	H	J	K	L	M	N	N	P	R	S	T	U	V	W	X	Y	Z	AA	AB	AC	AC
ASSY	6A10329															N	P	R	S	T	U	V	W	X	Y	Z	AA	AB	AC	AC
LOGICS	2C00552	ORIG	-	A	A	A	A	A	A	A	A	B	B	B	B	C	D	E	F	G	H	J	K	L	M	N	P	R	S	T
DETAIL	4A00584	ORIG	-	A	A	B	B	B	B	B	B	B	B	B	B	C	C	D	D	D	D	E	E	E	E	E	E	E	E	E
ARTWORK	3A00077	ORIG	01	A	A	B	B	B	B	B	B	B	B	B	B	B	B	C	C	C	C	D	D	D	D	D	D	D	D	D
SCREEN	3A00083	ORIG	-	-	-	-	-	-	-	-	-	-	-	-	-	-	-	-	-	-	-	A	A	A	A	A	A	A	A	A

REV	NGRG CHANGE NO.	DWN	CHKD	APP'D	MO. DAY YR.
T	CN-3091	J.L.	[illegible]		6-17-86
S	CN-3059	MP	[illegible]		5-28-86
R	CN-3043	M.S.	[illegible]	[illegible]	2-5-86
P	CN 2922	[illegible]	[illegible]	[illegible]	6-25-85
N	CN-2856	G.A.	[illegible]	[illegible]	[illegible]
M	CN-2461	M.S.	[illegible]	[illegible]	7-31-84
L	CN-2594	M.S.	[illegible]	[illegible]	7-30-84
K	CN-2528	M.S.	[illegible]	[illegible]	7-20-84
J	CN-2285	D.W.	[illegible]	[illegible]	8-23-83
H	CN 2273	M.S.	[illegible]	[illegible]	8-10-83
G	CN-2266	F.M.	[illegible]	[illegible]	6-17-83
F	CN-2237	D.W.	[illegible]	[illegible]	6-6-83
E	CN-2197	M.S.	[illegible]	[illegible]	4-13-83
D	CN-2179	F.M.	[illegible]	[illegible]	3-10-83
C	CN-2044	F.M.	[illegible]	[illegible]	12-21-82
B	CN 1849	FM	[illegible]	[illegible]	[illegible]
A	CN 1339	M.S.	[illegible]	[illegible]	[illegible]
ORIGINAL ISSUE		M.S.	[illegible]	[illegible]	2-26-80

CHYRON TELESYSTEMS
265 Bethpage-Spagnoli Road
Melville, New York 11747

TITLE
RGU MEMORY
LOGIC (J4)

C 2C0 0552

SHEET OF

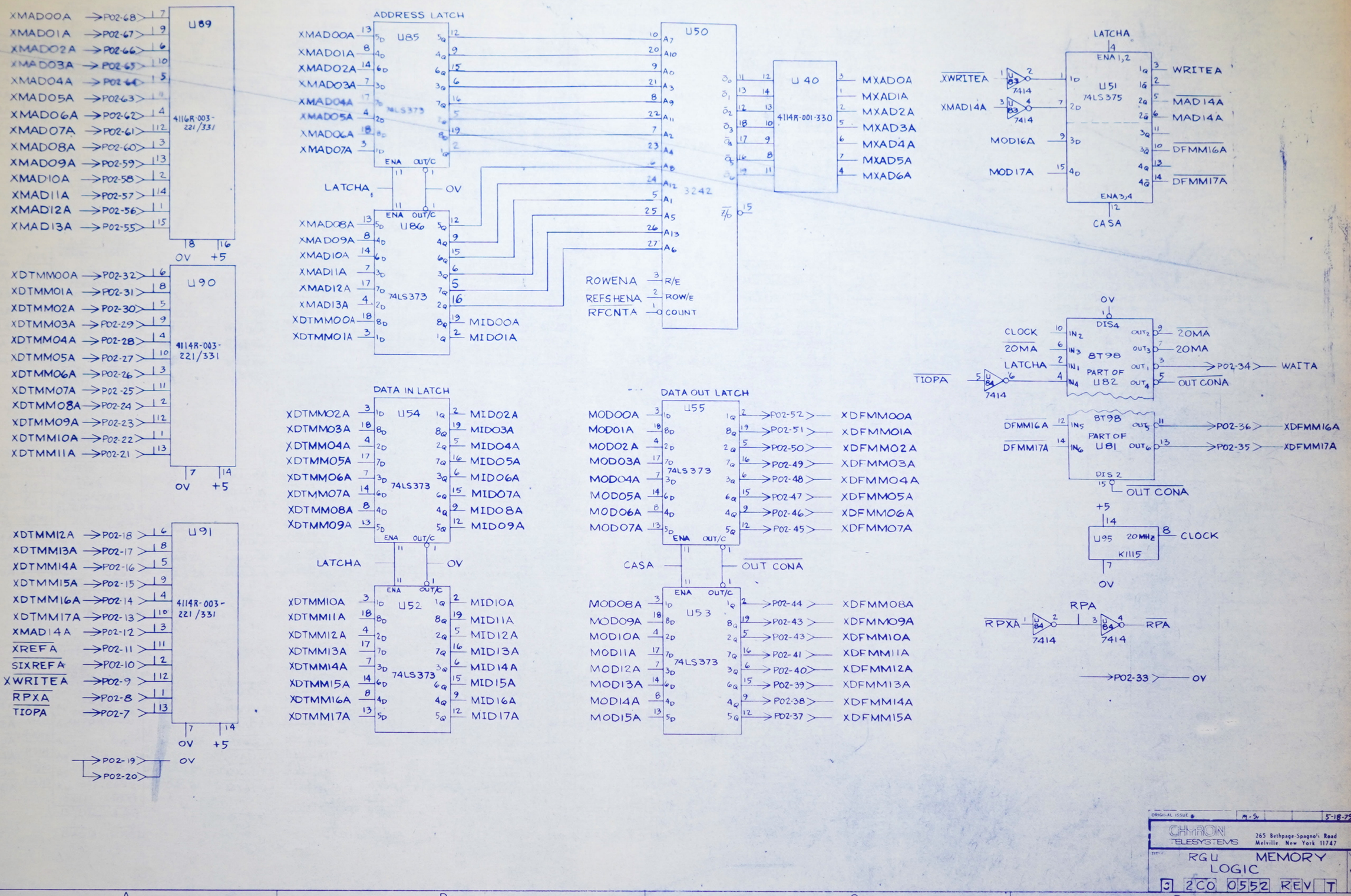
A
B
C
D
U89
XMAD00A → P02-68
XMAD01A → P02-67
XMAD02A → P02-66
XMAD03A → P02-65
XMAD04A → P02-64
XMAD05A → P02-63
XMAD06A → P02-62
XMAD07A → P02-61
XMAD08A → P02-60
XMAD09A → P02-59
XMAD10A → P02-58
XMAD11A → P02-57
XMAD12A → P02-56
XMAD13A → P02-55
4116R-003-221/331
OV +5
U90
XDTMM00A → P02-32
XDTMM01A → P02-31
XDTMM02A → P02-30
XDTMM03A → P02-29
XDTMM04A → P02-28
XDTMM05A → P02-27
XDTMM06A → P02-26
XDTMM07A → P02-25
XDTMM08A → P02-24
XDTMM09A → P02-23
XDTMM10A → P02-22
XDTMM11A → P02-21
4114R-003-221/331
OV +5
U91
XDTMM12A → P02-18
XDTMM13A → P02-17
XDTMM14A → P02-16
XDTMM15A → P02-15
XDTMM16A → P02-14
XDTMM17A → P02-13
XMAD14A → P02-12
XREFA → P02-11
SIXREFA → P02-10
XWRITEA → P02-9
RPXA → P02-8
TIOPA → P02-7
4114R-003-221/331
OV +5
P02-19 OV
P02-20
ADDRESS LATCH
U85
XMAD00A
XMAD01A
XMAD02A
XMAD03A
XMAD04A
XMAD05A
XMAD06A
XMAD07A
74LS373
ENA OUT/C
LATCHA
OV
U86
XMAD08A
XMAD09A
XMAD10A
XMAD11A
XMAD12A
XMAD13A
XDTMM00A
XDTMM01A
74LS373
MID00A
MID01A
U50
A7 A10 A0 A3 A9 A11 A2 A4 A8 A12 A1 A5 A13 A6
3242
ROWENA → R/E
REFSHENA → ROW/E
RFCNTA → COUNT
U40
4114R-001-330
MXAD0A
MXAD1A
MXAD2A
MXAD3A
MXAD4A
MXAD5A
MXAD6A
LATCHA
ENA 1,2
U51
74LS375
XWRITEA
XMAD14A
7414
MOD16A
MOD17A
WRITEA
MAD14A
MAD14A
DFMM16A
DFMM17A
ENA 3,4
CASA
OV
DIS4
8T98
CLOCK
20MA
LATCHA
PART OF U82
TIOPA
7414
P02-34 WAITA
OUT CONA
DFMM16A
DFMM17A
PART OF U81
DIS 2
P02-36 XDFMM16A
P02-35 XDFMM17A
+5
U95 20MHz K1115
CLOCK
RPA
RPXA
P02-33 OV
DATA IN LATCH
U54
XDTMM02A
XDTMM03A
XDTMM04A
XDTMM05A
XDTMM06A
XDTMM07A
XDTMM08A
XDTMM09A
74LS373
MID02A
MID03A
MID04A
MID05A
MID06A
MID07A
MID08A
MID09A
LATCHA
OV
U52
XDTMM10A
XDTMM11A
XDTMM12A
XDTMM13A
XDTMM14A
XDTMM15A
XDTMM16A
XDTMM17A
74LS373
MID10A
MID11A
MID12A
MID13A
MID14A
MID15A
MID16A
MID17A
DATA OUT LATCH
U55
MOD00A
MOD01A
MOD02A
MOD03A
MOD04A
MOD05A
MOD06A
MOD07A
74LS373
P02-52 XDFMM00A
P02-51 XDFMM01A
P02-50 XDFMM02A
P02-49 XDFMM03A
P02-48 XDFMM04A
P02-47 XDFMM05A
P02-46 XDFMM06A
P02-45 XDFMM07A
CASA
OUT CONA
U53
MOD08A
MOD09A
MOD10A
MOD11A
MOD12A
MOD13A
MOD14A
MOD15A
74LS373
P02-44 XDFMM08A
P02-43 XDFMM09A
P02-43 XDFMM10A
P02-41 XDFMM11A
P02-40 XDFMM12A
P02-39 XDFMM13A
P02-38 XDFMM14A
P02-37 XDFMM15A
ORIGINAL ISSUE M.S. 5-18-79
CHYRON TELESYSTEMS 265 Bethpage-Spagnoli Road Melville, New York 11747
TITLE: RGU MEMORY LOGIC
3 2CO 0552 REV T
SHEET 2 OF 6

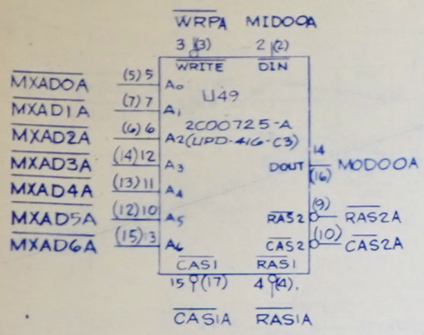

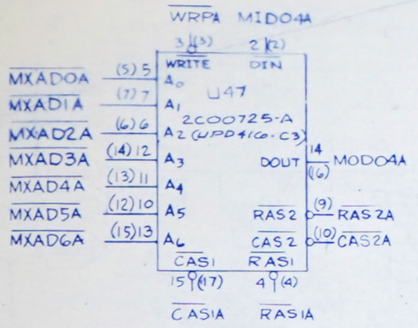

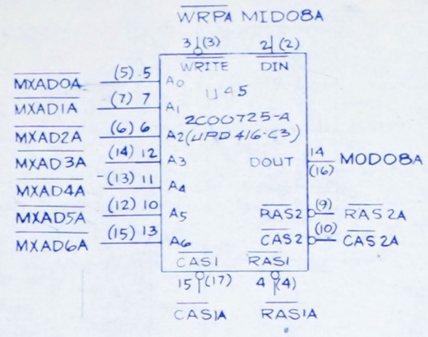

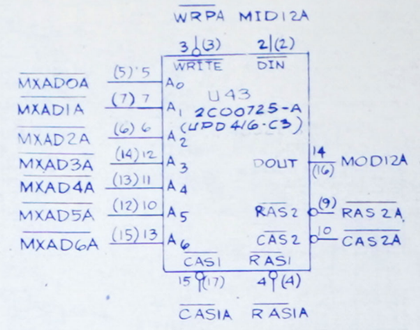

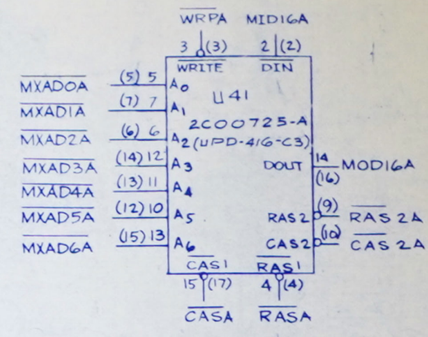

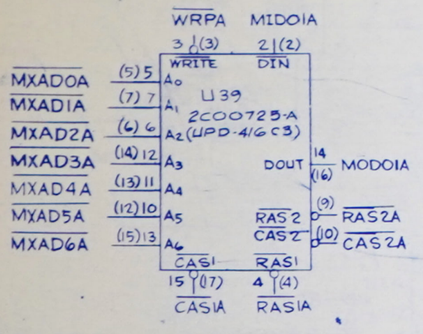

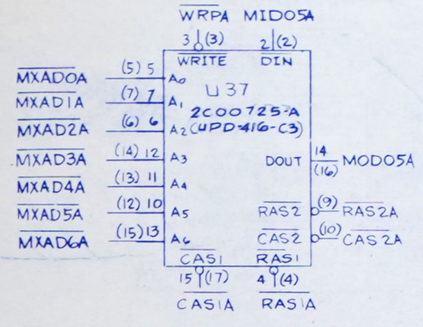

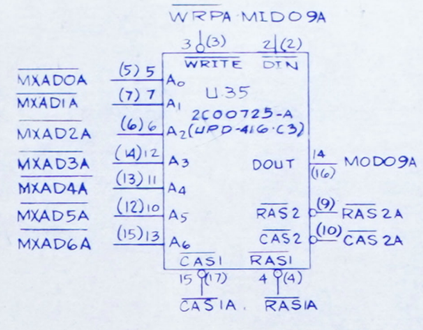

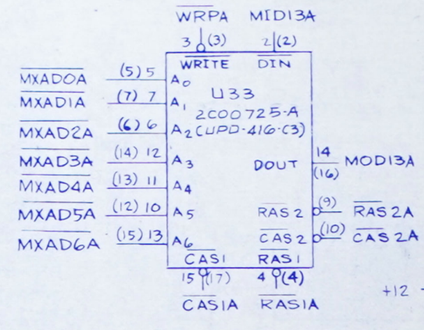

NOTE:
PIN NUMBERS WITHOUT PARENTHESIS FOR MK4116P-3 OR UPD 416-C3
PIN NUMBERS WITH PARENTHESIS FOR MK4332P-3
VDD POWER (+12V) PIN 8 & (8)
VCC POWER (+5V) PIN 9 & (11)
VSS GROUND PIN 16 & (18)

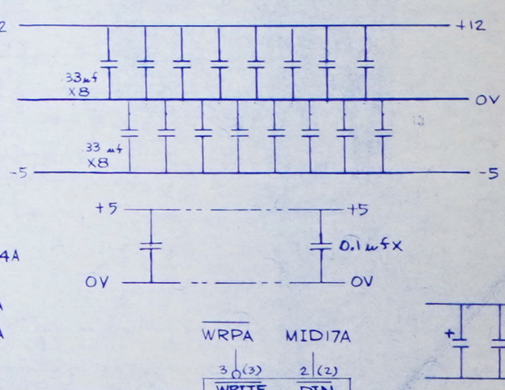

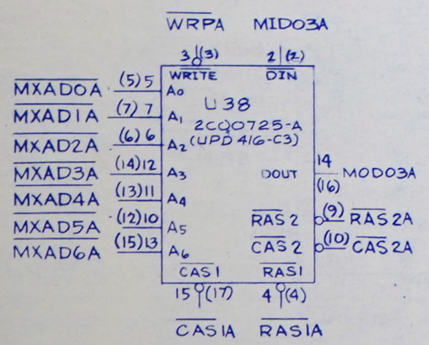

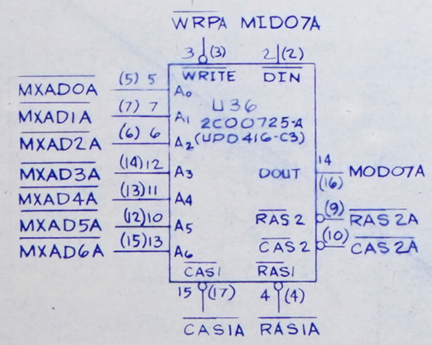

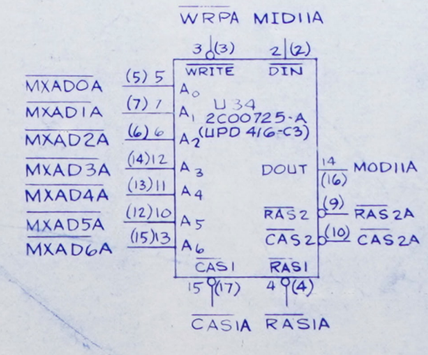

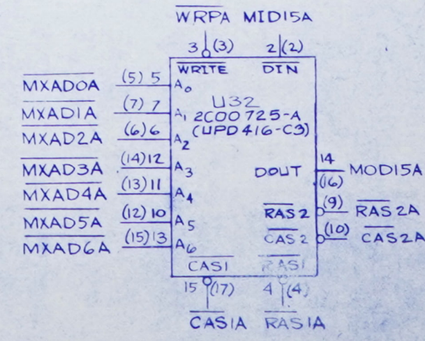

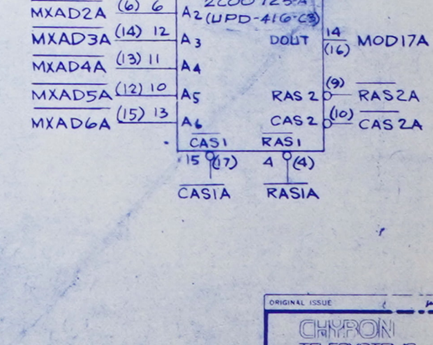

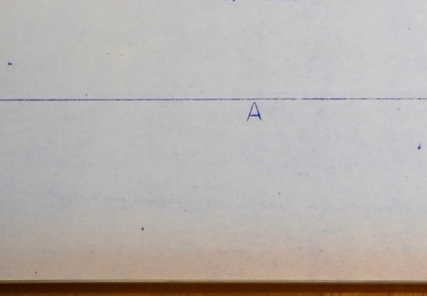

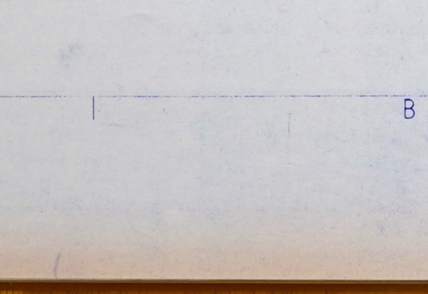

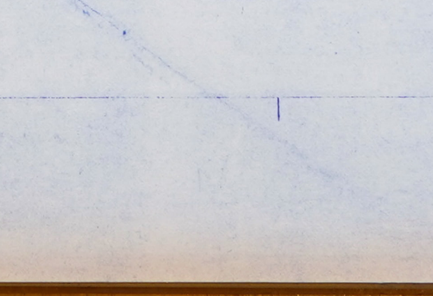

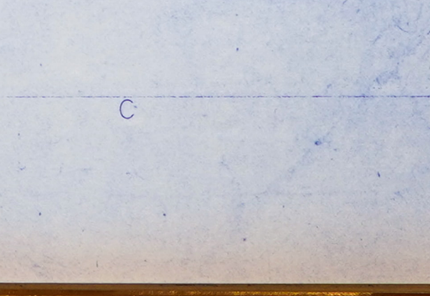

ORIGINAL ISSUE

CHYRON TELESYSTEMS 2/5 Secharpage-Spagnoli Road Melville, New York 11747

TITLE RGU MEMORY LOGIC

C 2CO 0552 REV T

SHEET 3 OF 6

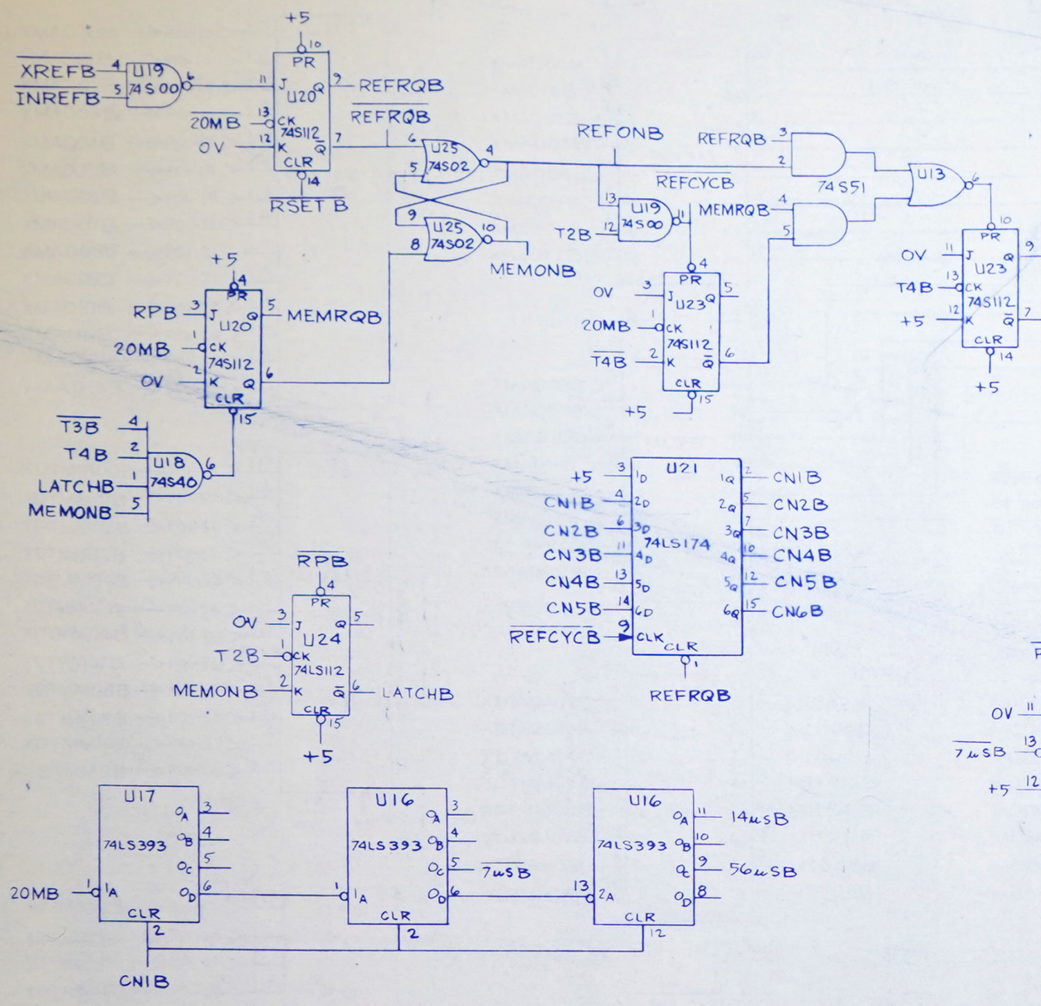

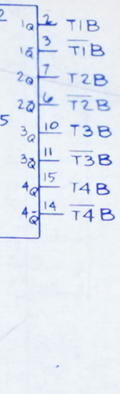

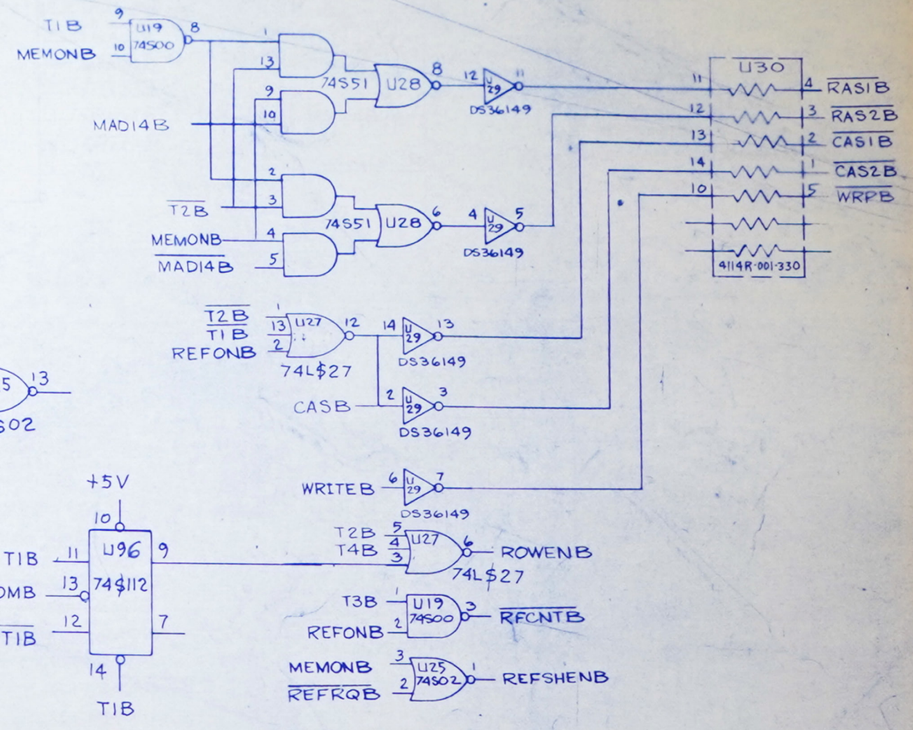

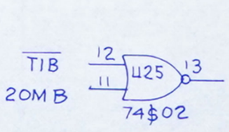

ORIGINAL ISSUE	
CHYRON TELESYSTEMS	265 Bethpage-Spagnoli Road Melville, New York 11747
TITLE	RGU MEMORY LOGIC
C	2CO 0552 REV T
SHEET 4 OF	

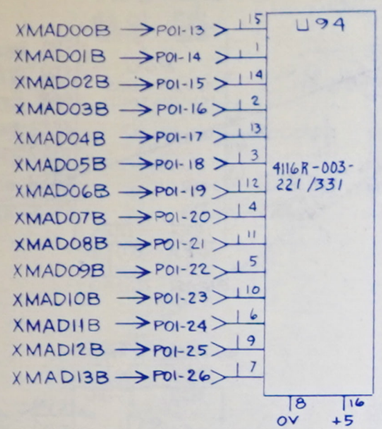

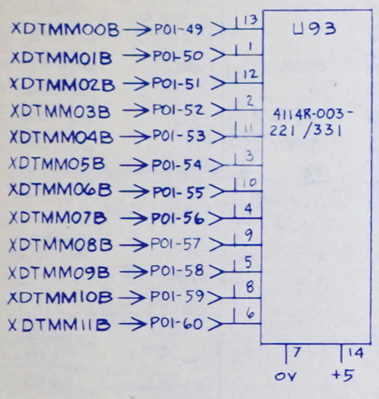

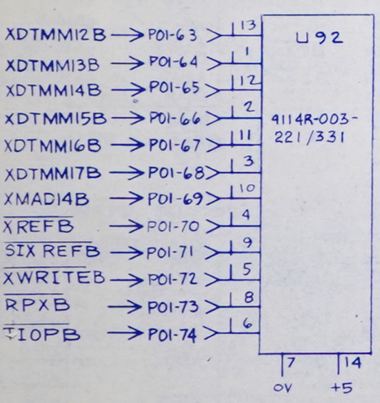

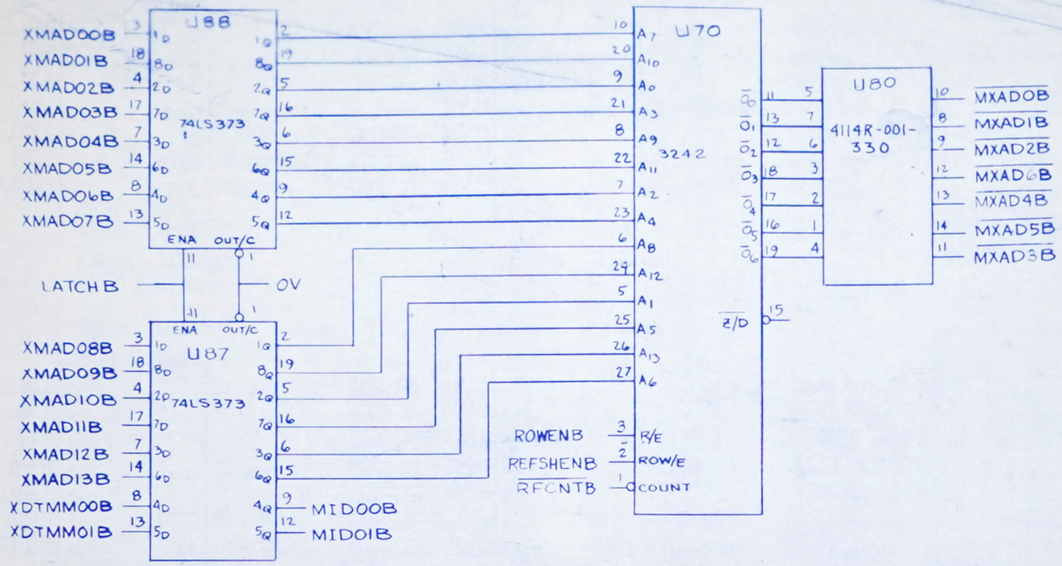

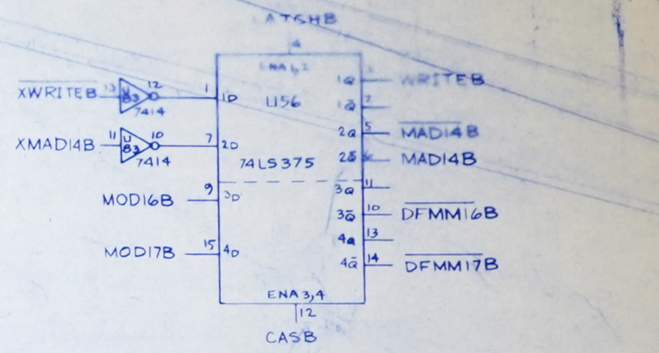

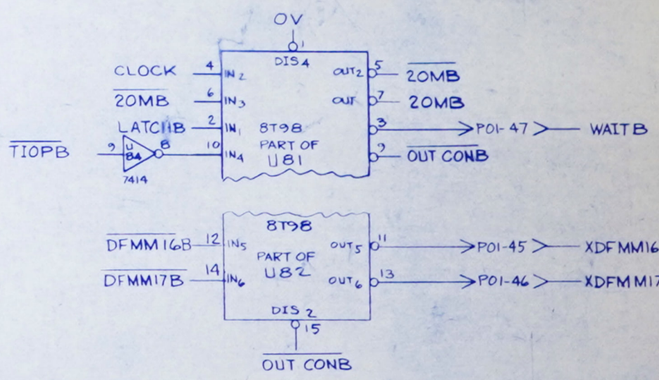

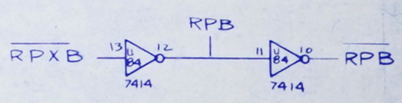

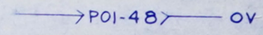

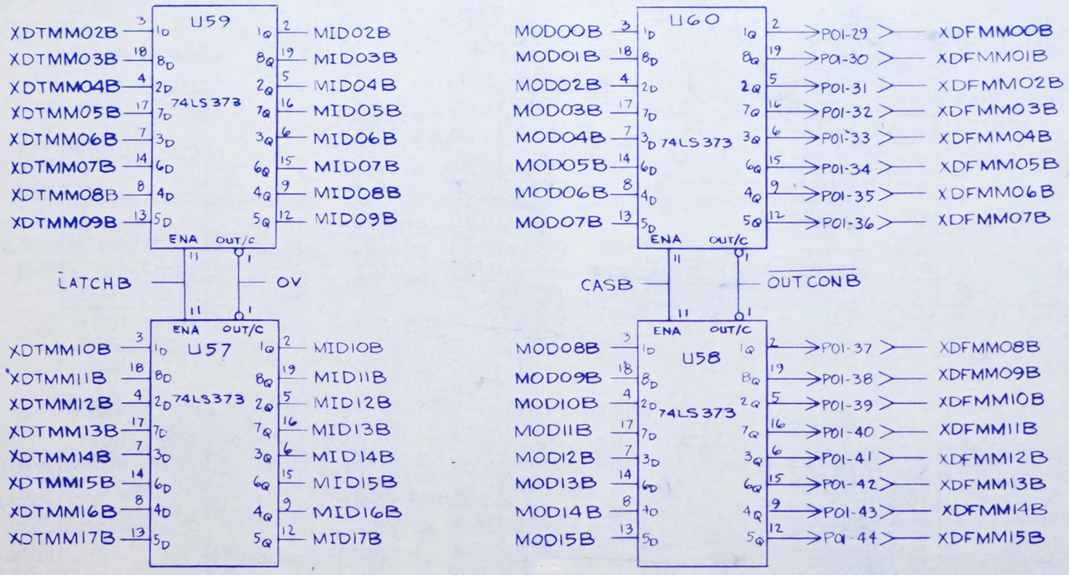

ORIGINAL ISSUE	4.5		5-18-79

CHYRON TELESYSTEMS
265 Bethpage-Spagnoli Road
Melville, New York 11747

TITLE: R.G.U. MEMORY LOGIC

C 2CO 0552 REV T

SHEET 5 OF 6

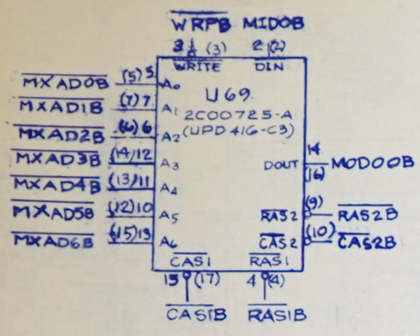

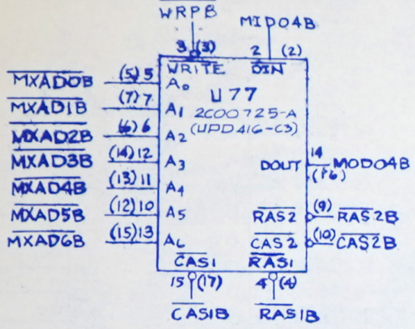

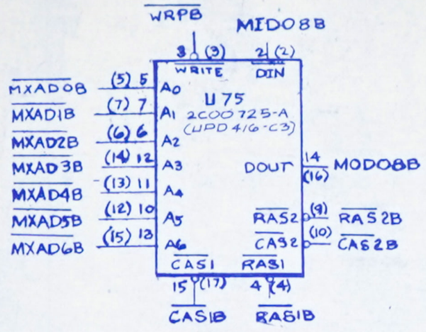

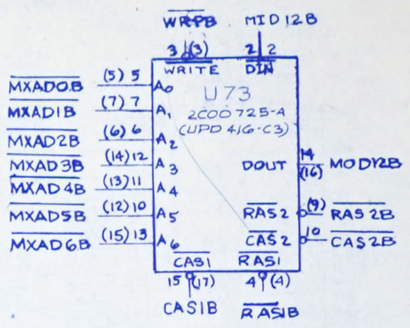

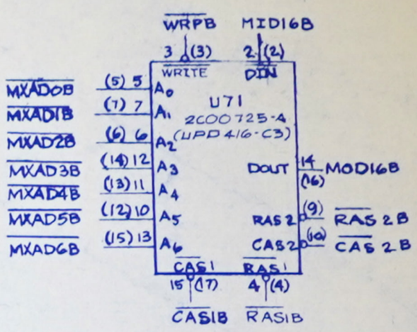

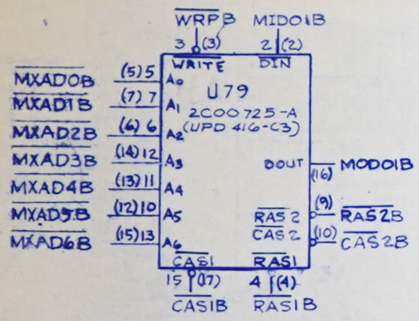

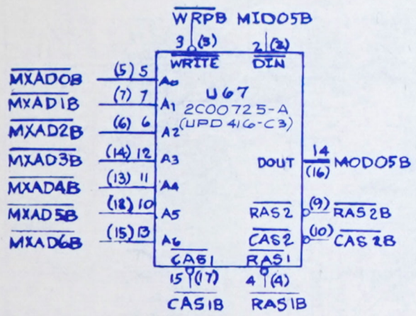

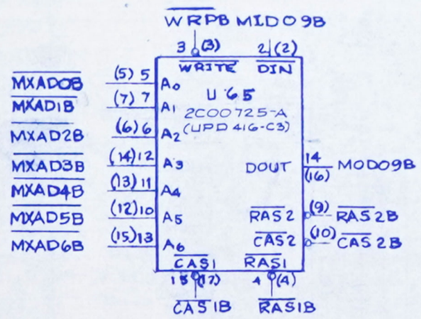

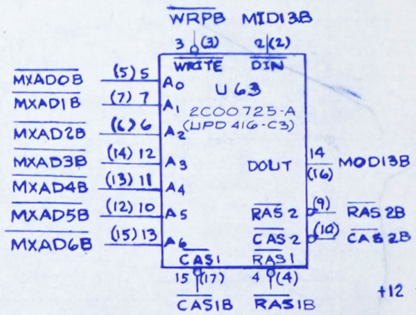

NOTE:
PIN NUMBERS WITHOUT PARENTHESIS FOR MK4116P-3 OR UPD 416-C3
PIN NUMBERS WITH PARENTHESIS FOR MK4332P-3
VDD POWER (+12V) PIN 8 & (8)
VCC POWER (+5V) PIN 9 & (1)
VSS GROUND PIN 16 & (18)

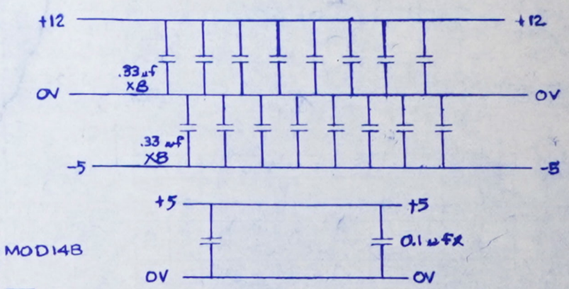

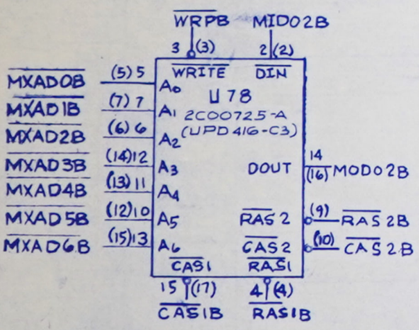

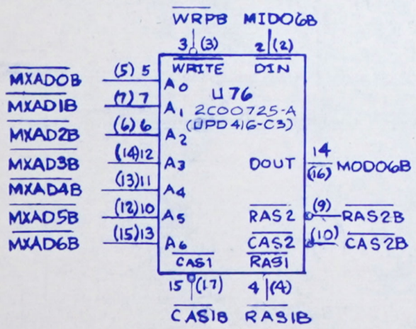

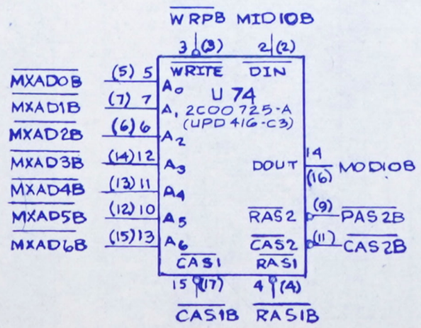

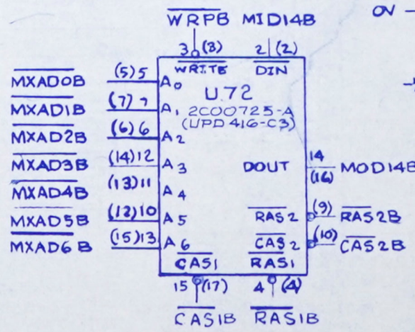

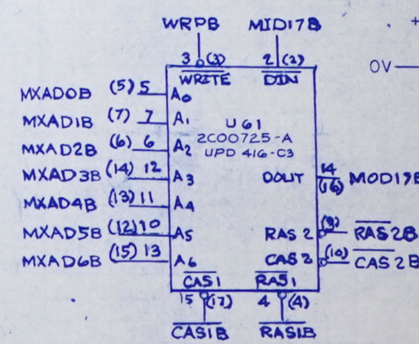

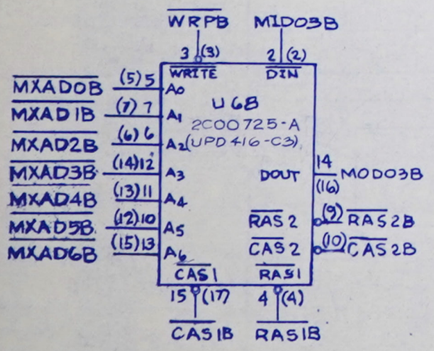

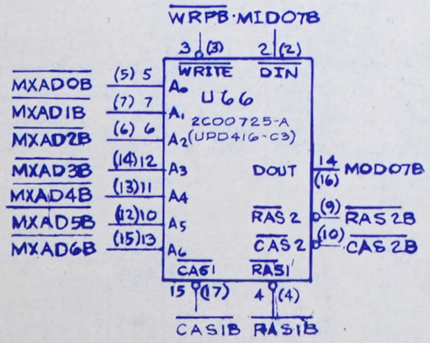

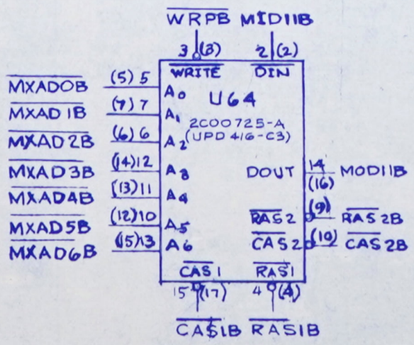

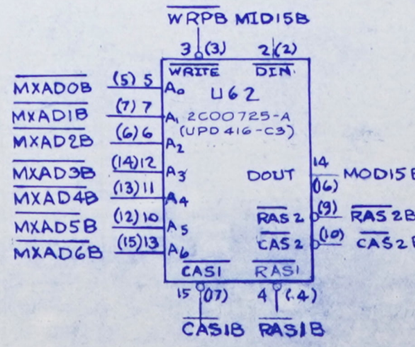

CHRON TELESYSTEMS

RGU MEMORY LOGIC

C 2C0 0552 T

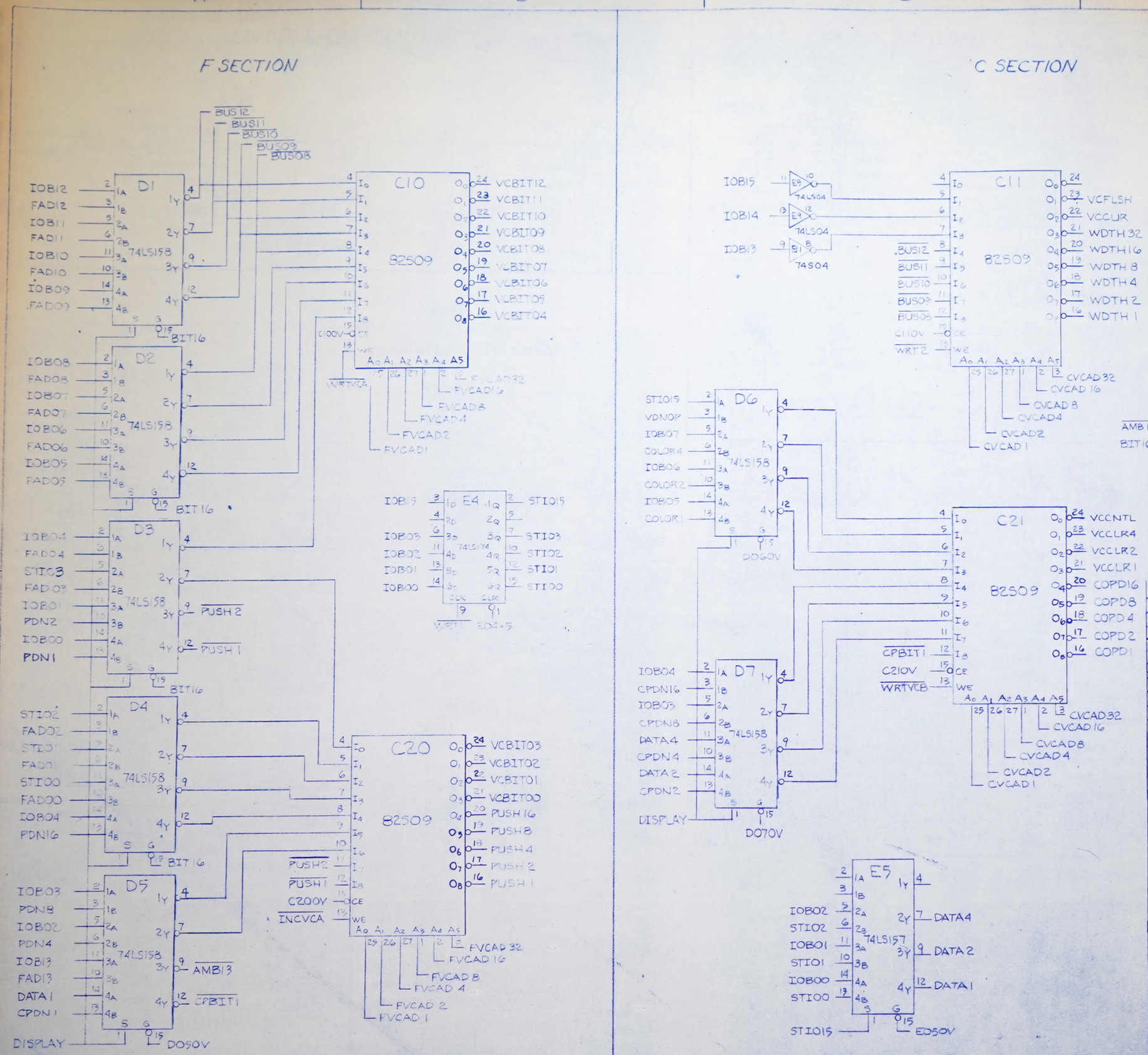

REV.	ENGRG CHANGE NO.	DWN.	CHKD.	APP'D.	MO. DAY YR.
A	D	CN 3139	VS	[illegible]	9-29-86
A	C	CN-2952	R.M.	[illegible]	3-31-86
A	B	CN-2911	R.M.	[illegible]	7-17-85
A	A	CN-2881	F.M.	[illegible]	5-13-85
	Z	CN-2805	RLC	[illegible]	2-4-85
	Y	CN 2691	RLC	[illegible]	2-4-85
	X	CN-2756	RLC	[illegible]	2-4-85
	W	CN-2639	R.G.	[illegible]	9-28-84
	V	CN 2605	M.S.	[illegible]	9-6-84
	U	CN-2607	M.S.	[illegible]	7-25-84
	T	CN-2465	F.M.	[illegible]	1-23-84
	S	CN-2376	F.M.	[illegible]	11-15-83
	R	CN-2369	F.M.	[illegible]	10-26-83
	P	CN-2340	D.W.	[illegible]	9-12-83
	N	CN-2270	D.W.	F.M.	6-13-83
	M	CN-2184	F.M.	[illegible]	3-16-83
	L	CN-2187	D.W	[illegible]	3-10-83
	K	CN-2168	F.M.	[illegible]	2-11-83
	J	CN-2044	F.M.	[illegible]	11-22-82
	H	CN-1970	F.M.	[illegible]	10-1-31
	G	CN 2014	F.M.	[illegible]	9-24-82
	F	CN 1957	RKL	[illegible]	8-5-82
	E	CN 1956	F.M.	[illegible]	7-19-82
	D	CN 1949	J.C.	[illegible]	7-9-82
	C	CN 1825	M.S.	[illegible]	6-23-82
	B	CN-1923	F.M.	[illegible]	5-21-82
	A	CN-1900	F.M.	[illegible]	4-28-82

ORIGINAL ISSUE [illegible]

CHYRON TELESYSTEMS
265 Spagnoli Road
Melville, New York 11747

TITLE CHARACTER GENERATOR
J5 J6 NEW R.G. U.2

C 2A0 0416

SHEET 1 OF 11

TITLE	DWG. NO.	REVISION
ASSEMBLY	2C00720	Ø A B C D E F G H J K L M N P R S T U V W X Y Z AA AB AC AD AE
SUB-ASSY.	2C00721	Ø Ø Ø Ø A A A A A A B B B C C C C D E F F F G G G H J K L
LOGICS	2A00416	Ø A B C D E F G H H J K L M N P R S T U V W X Y Z AA AB AC AD
TAPE	620	Ø1 Ø Ø1 Ø1 Ø1 Ø1 Ø1 Ø1 Ø1 Ø1 Ø1 Ø1 Ø1 A A A A B B C C C C C C D D D D

LOAD/DISPLAY CONTROL

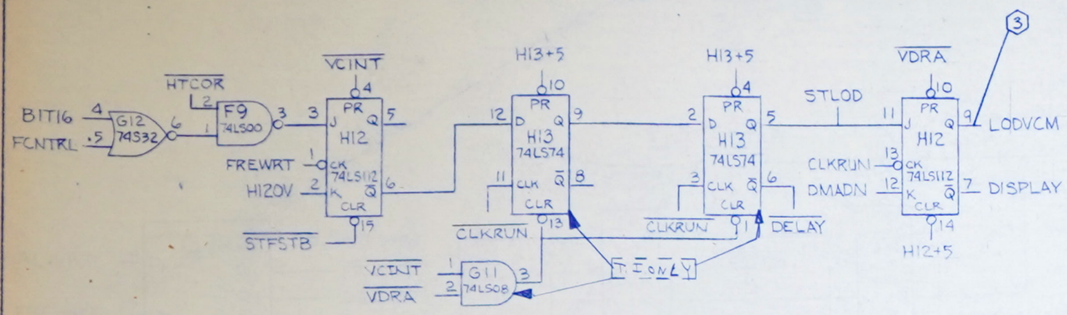

F & C ADDRESS GENERATOR

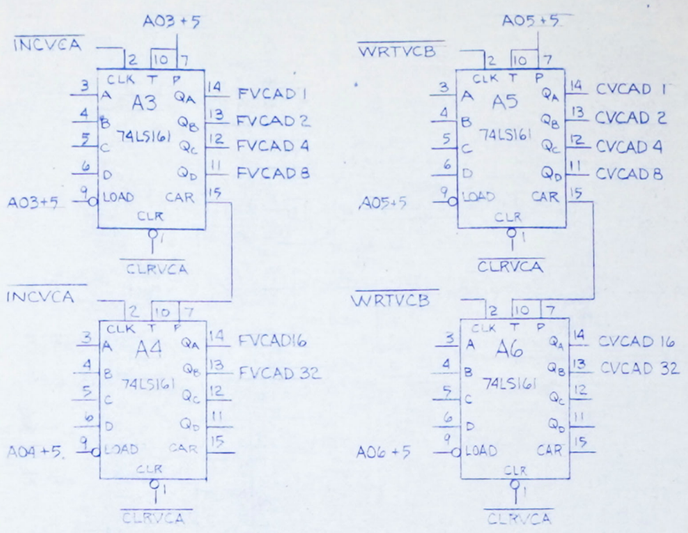

F&C ADDRESS CLEAR

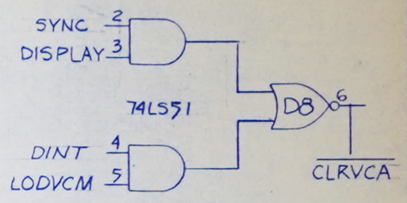

DISPLAY INTERRUPT

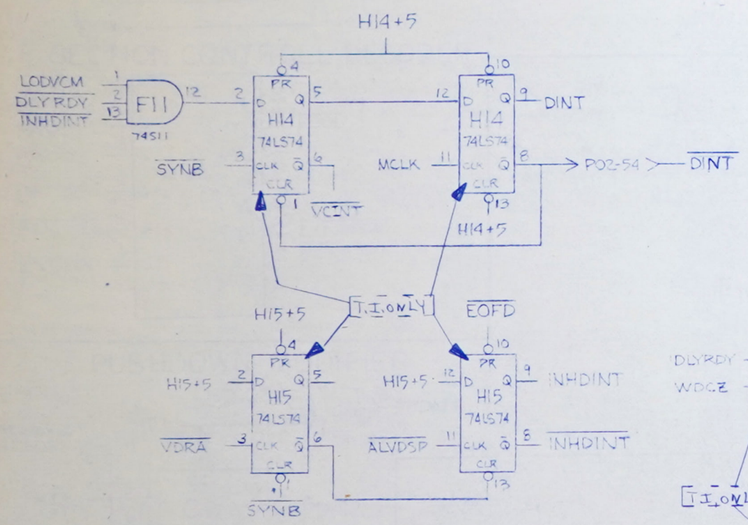

DMA STATUS

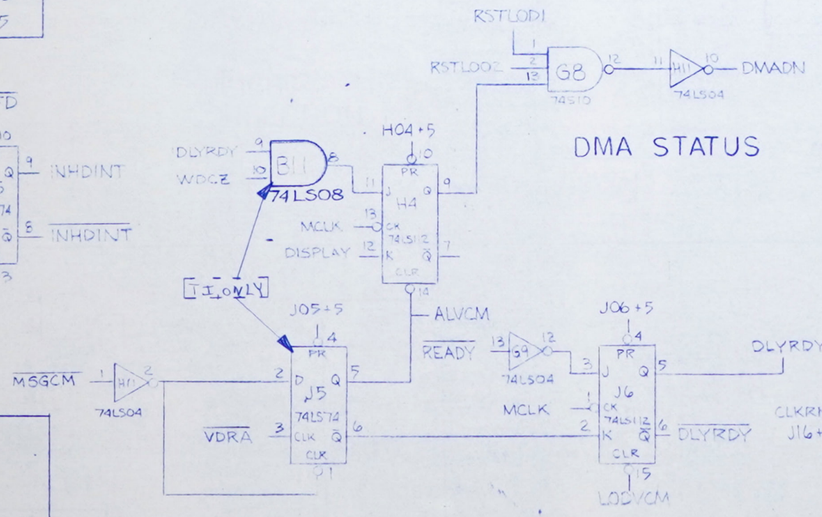

WRITE SELECT LINES

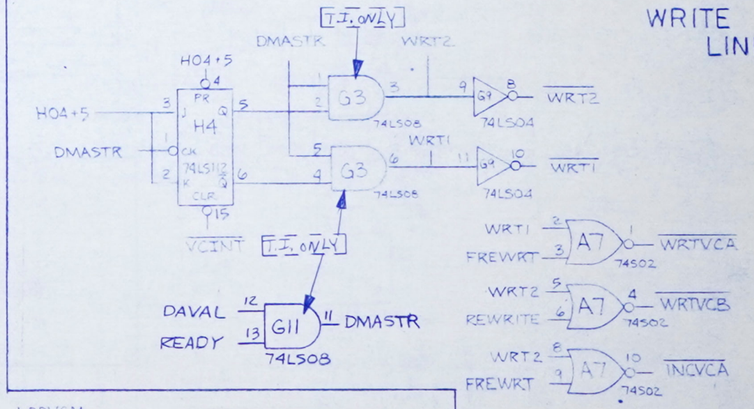

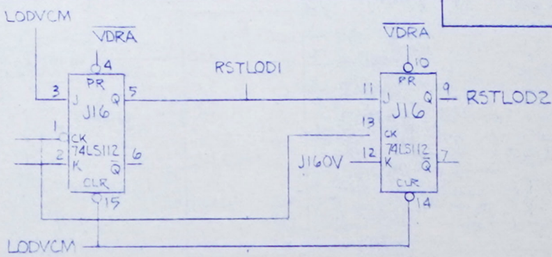

TIMING

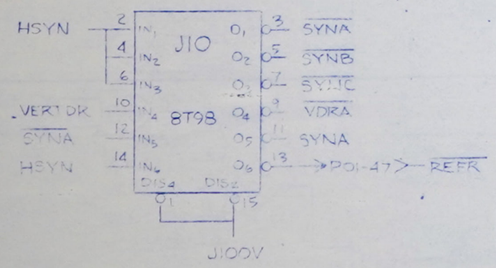

REV.	ENGRG CHANGE NO.	DWN.	CHKD.	APP'D.	MO. DAY YR.
ORIGINAL ISSUE		K. LOWERY			2-3-82

CHYRON TELESYSTEMS
265 Spagnoli Road
Melville, New York 11747

TITLE CHARACTER GENERATOR. J5 (J6) NEW R.G.U. 2

C 2A0 0476 REV. A

SHEET 2 OF 11

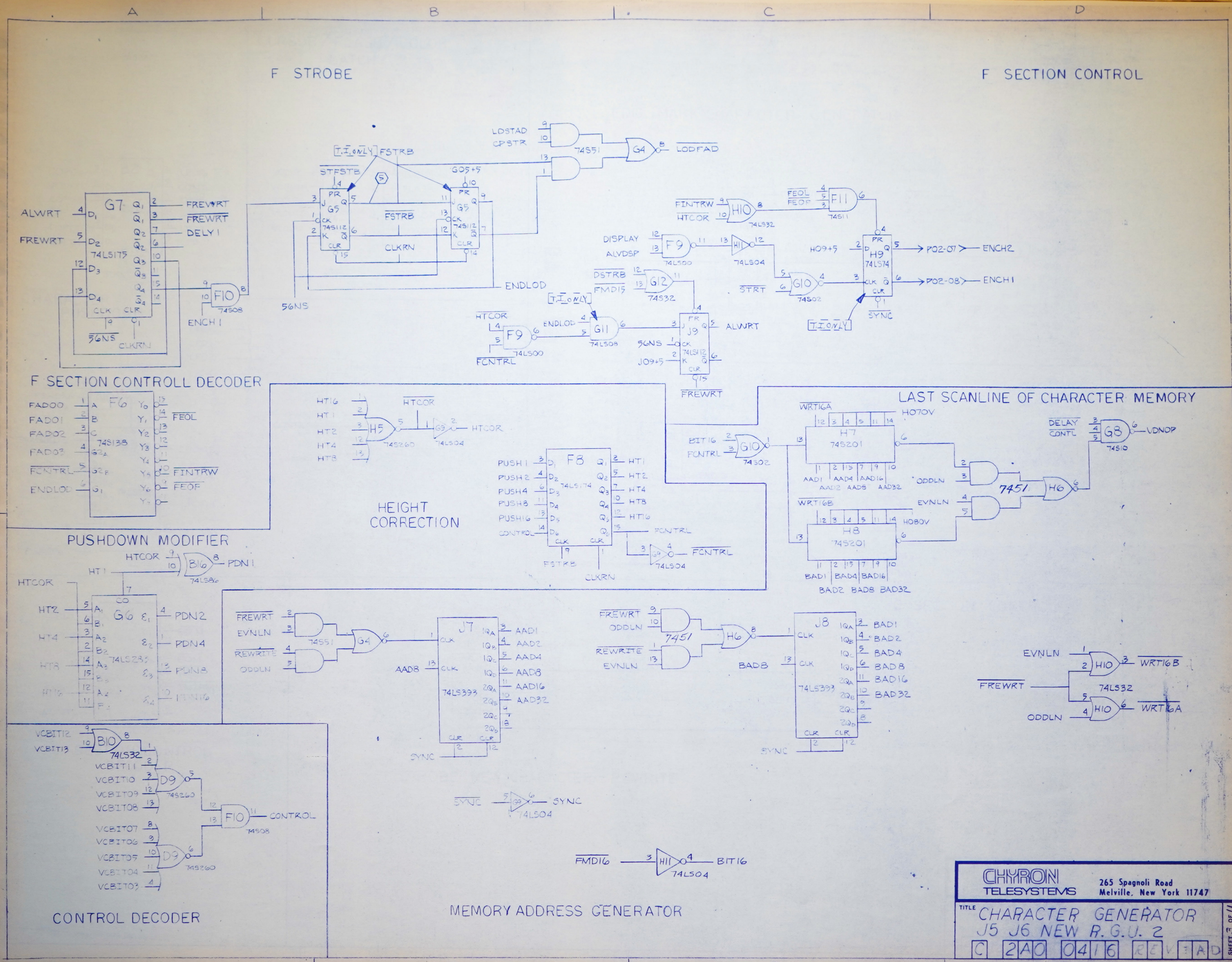
F STROBE
F SECTION CONTROL
F SECTION CONTROLL DECODER
PUSHDOWN MODIFIER
HEIGHT CORRECTION
LAST SCANLINE OF CHARACTER MEMORY
CONTROL DECODER
MEMORY ADDRESS GENERATOR
CHYRON TELESYSTEMS
265 Spagnoli Road
Melville, New York 11747
TITLE CHARACTER GENERATOR
J5 J6 NEW R.G.U. 2
C 2A0 0416 REV 1AD
SHEET 3 OF 11

CURSOR / FLASH / COLOR LATCH

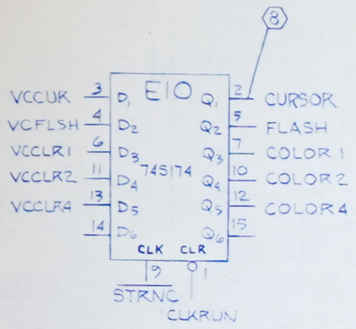

EDIT MARK CHARACTER GENERATOR

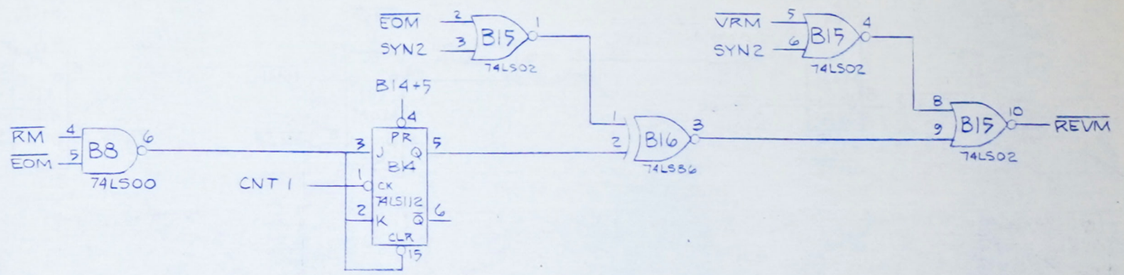

CHARACTER PUSHDOWN

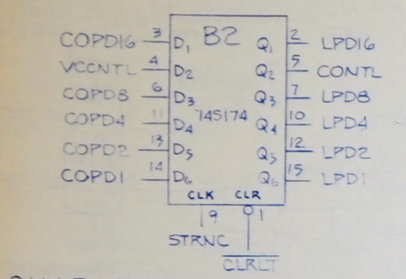

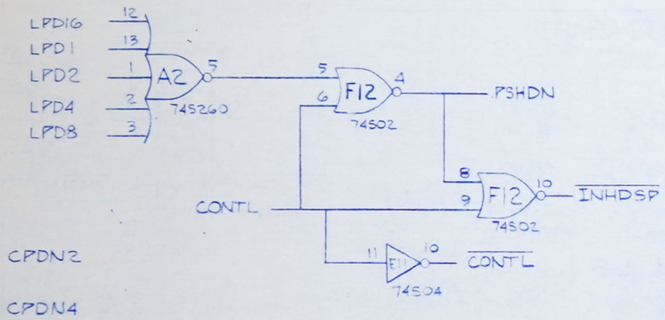

FLASH LOGICS

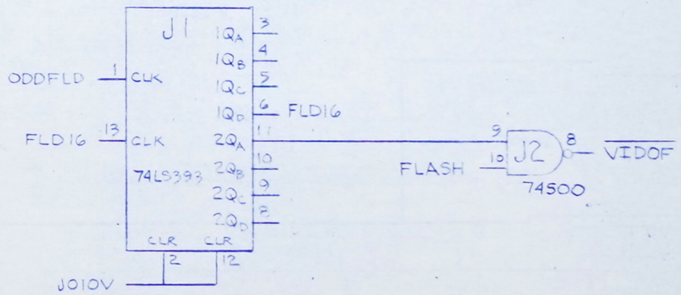

C SECTION CONTROL DECODER

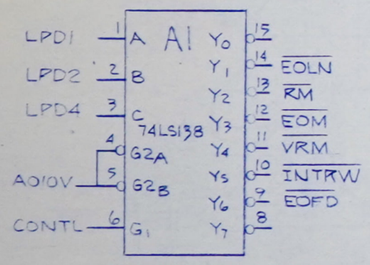

C SECTION CONTROL

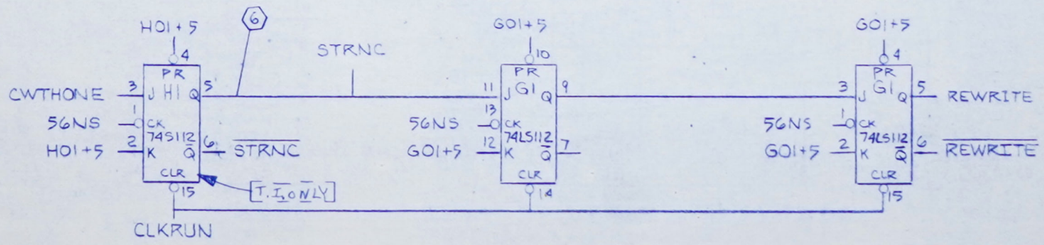

STROBE NEW CHARACTER - REWRITE

CHYRON TELESYSTEMS
265 Spagnoli Road
Melville, New York 11747

TITLE CHARACTER GENERATOR J5 J6 NEW R.G.U.2

C 2A0 0416 REV A D

SHEET 4 OF 11

START CYCLE

START OF SCANLINE

CHARACTER WIDTH CONTROL

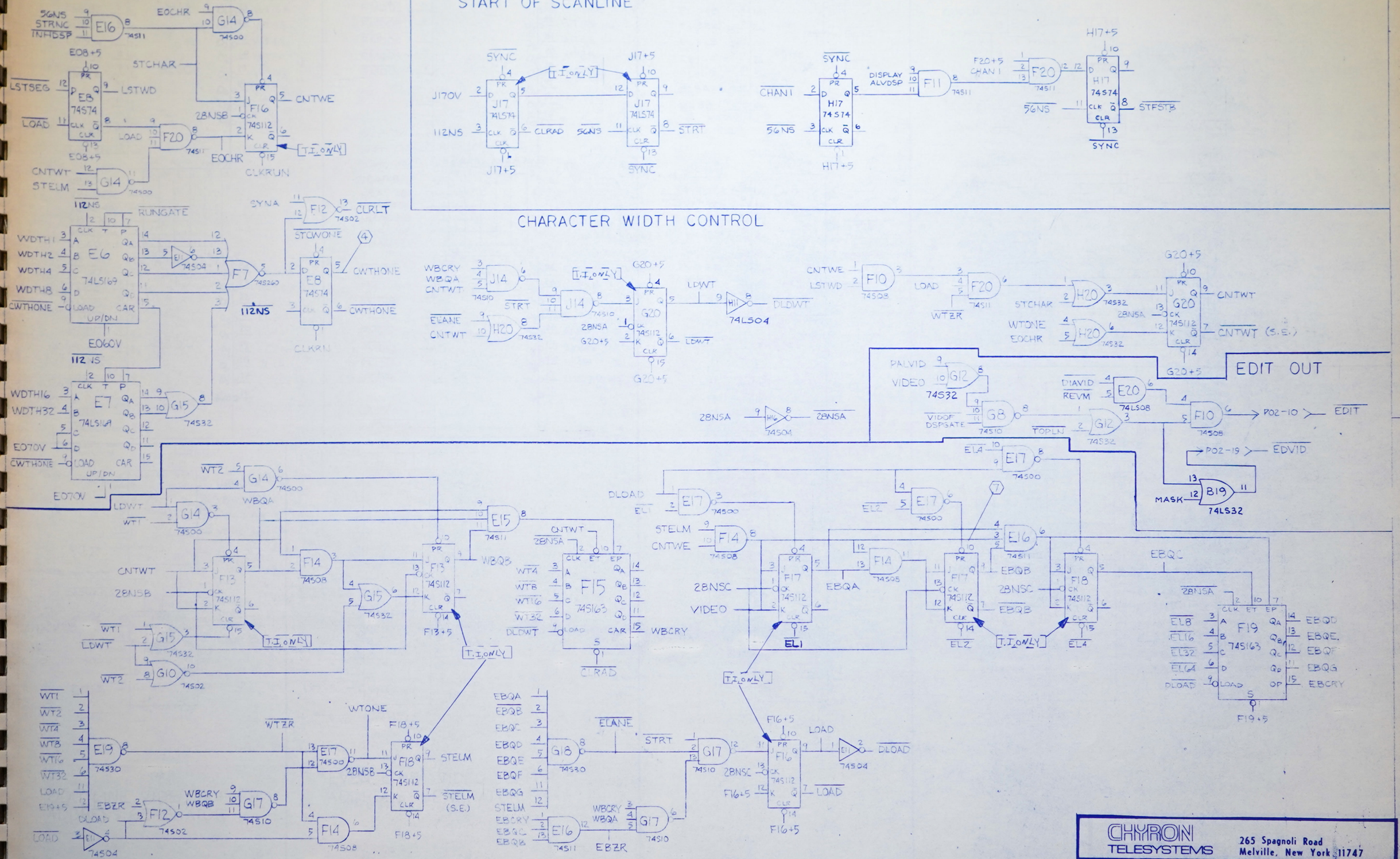

WAIT / ELEMENT COUNTERS

CHYRON TELESYSTEMS
265 Spagnoli Road
Melville, New York 11747

TITLE CHARACTER GENERATOR
J5 (J6) NEW R.G.U.2

C 2A0 0416 REV. A D

SHEET 5 OF 11

ODD LINE BUFFER CONTROL

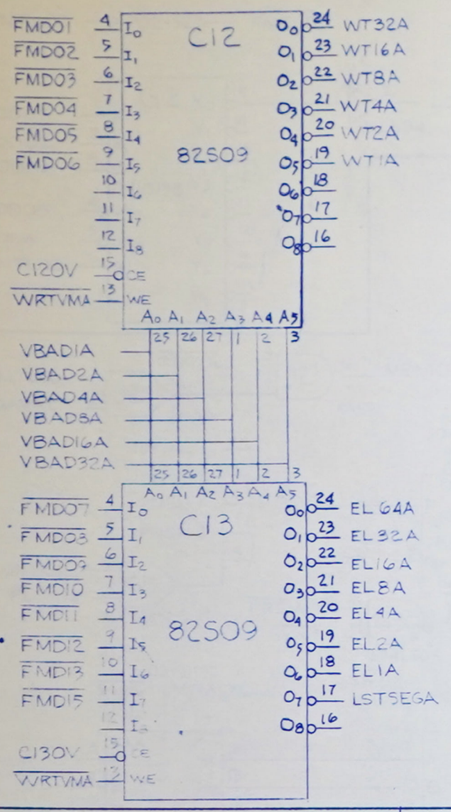

EVEN LINE VIDEO BUFFER

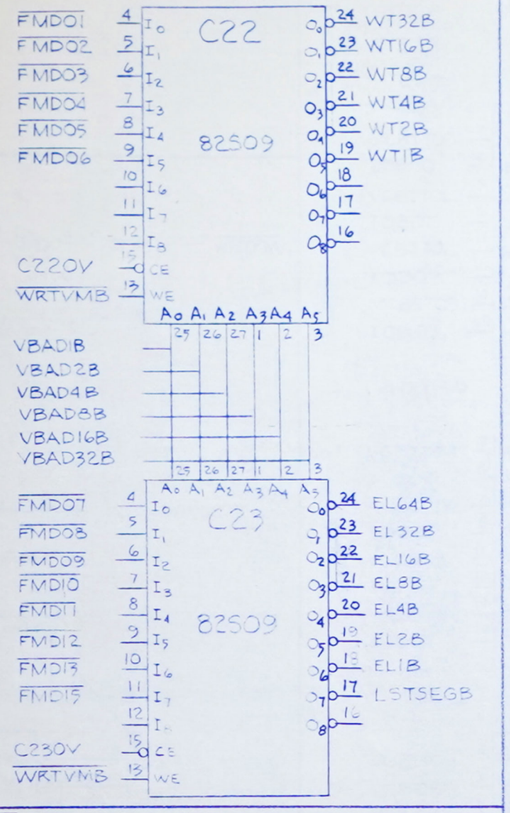

ODD/EVEN LINE VIDEO MUX

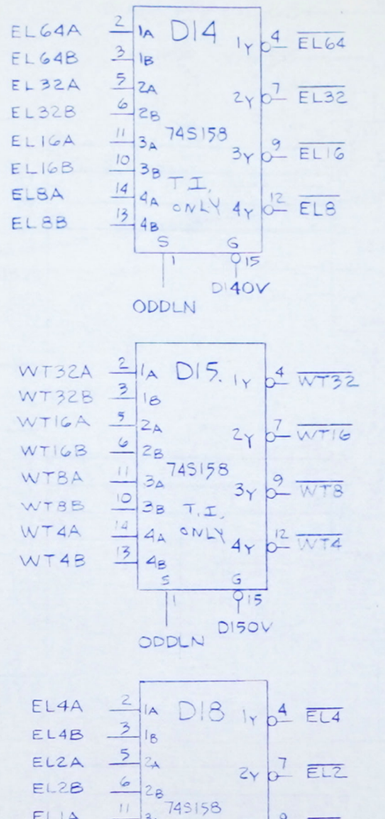

ODD/EVEN LINE VIDEO BUFFER CONTROL

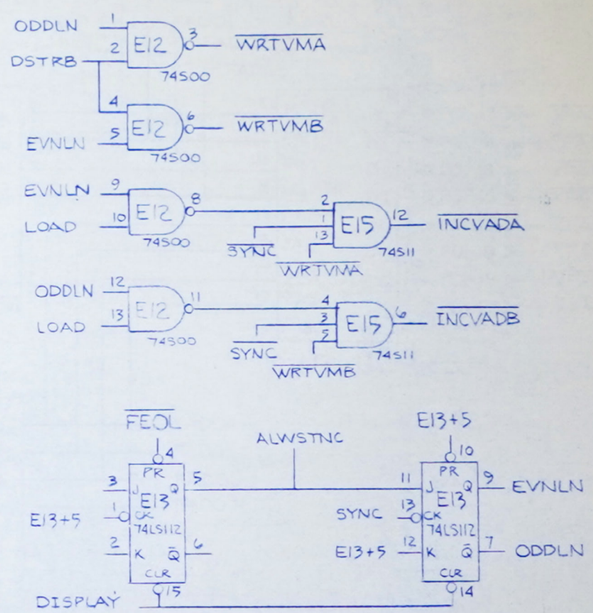

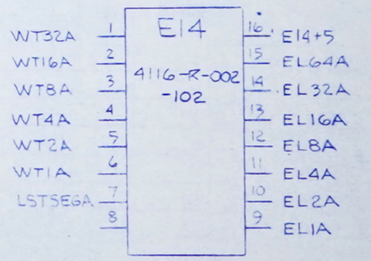

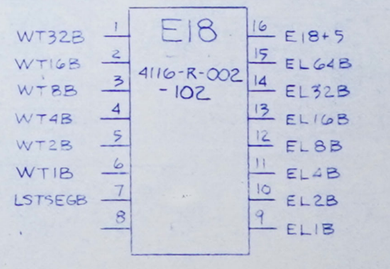

ODD LINE VIDEO BUFFER ADDRESS GENERATOR

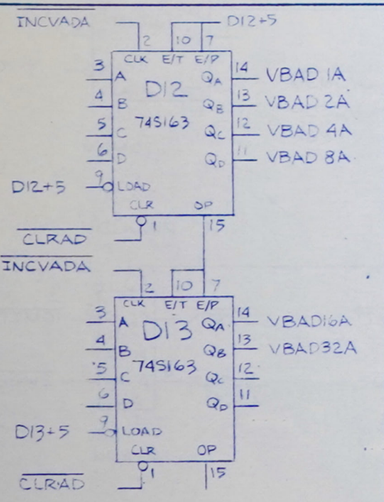

EVEN LINE VIDEO BUFFER ADDRESS GENERATOR

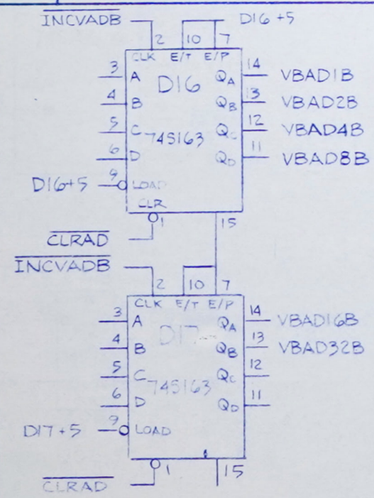

CHYRON TELESYSTEMS
265 Spagnoli Road
Melville, New York 11747

TITLE CHARACTER GENERATOR J5 J6 NEW R.G: U. 2

C 2A0 0416 REV A D

SHEET 6 OF 11

DEVICE DECODER

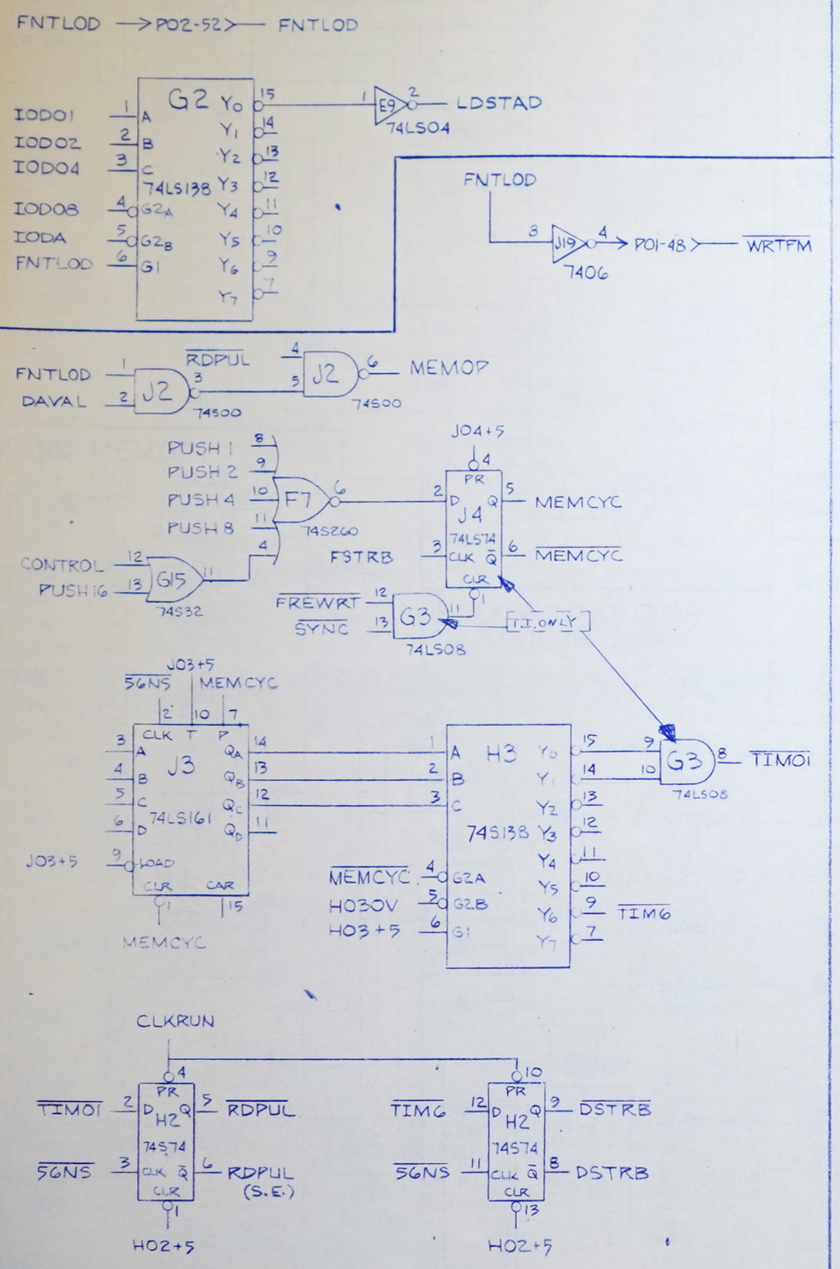

MEMORY CYCLE TIMING

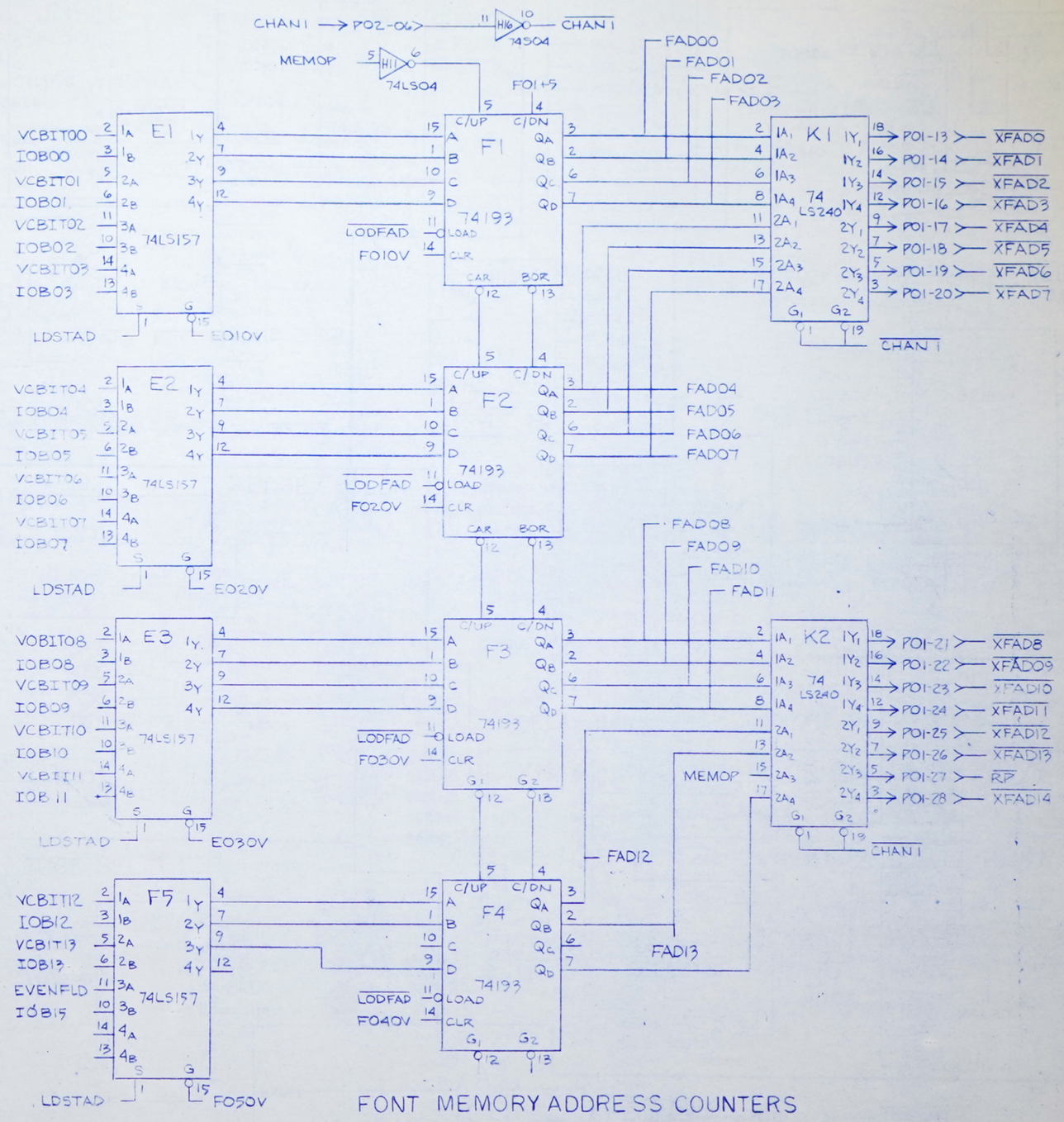

FONT MEMORY ADDRESS COUNTERS

CHYRON TELESYSTEMS
265 Spagnoli Road
Melville, New York 11747

TITLE CHARACTER GENERATOR J5 J6 NEW R.G.U. 2

C 2A0 0416 REV A D

SHEET 7 OF 11

BACKGROUND MEMORY ADDRESS GENERATOR

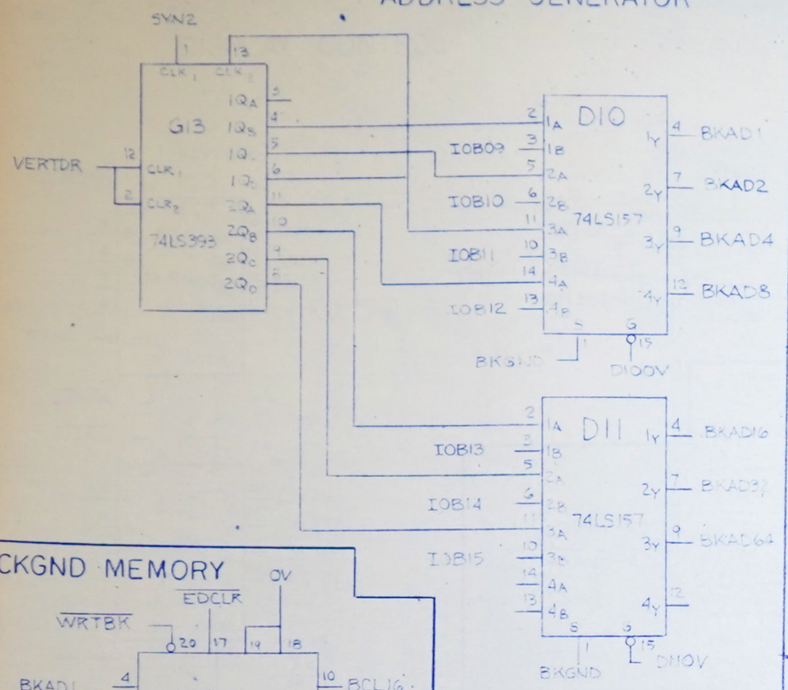

DEVICE DECODER

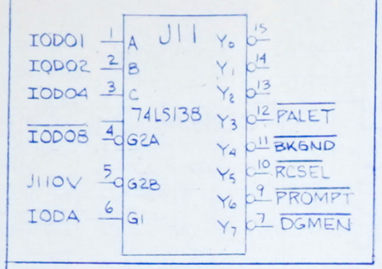

ROLL/CRAWL DECODE

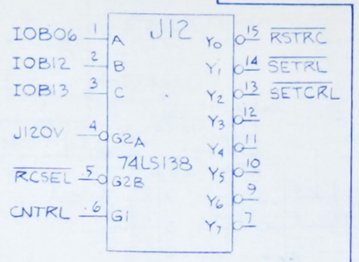

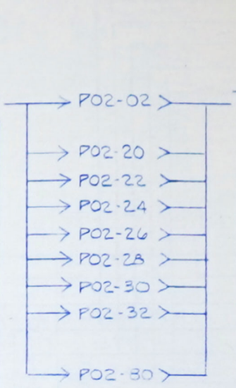

PALETTE BOX SPACE GENERATION

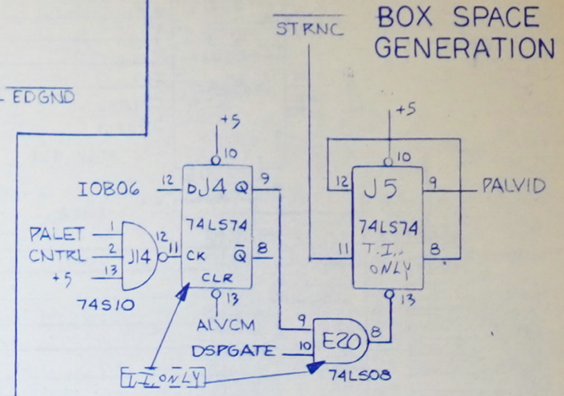

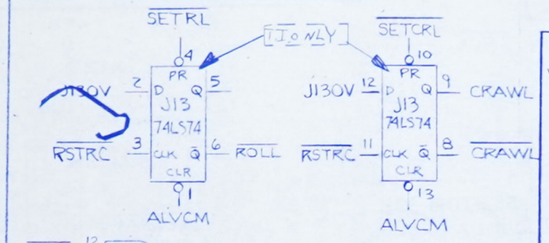

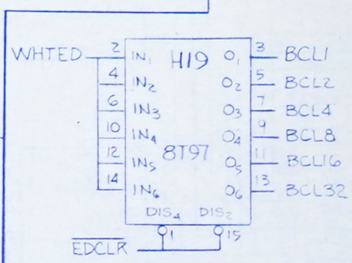

PALETE MEMORY

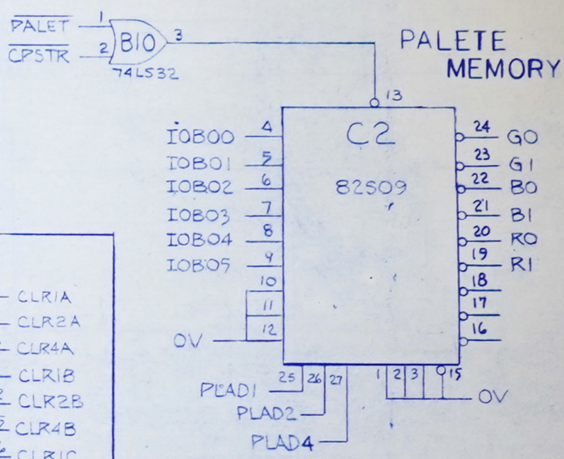

BCKGND MEMORY

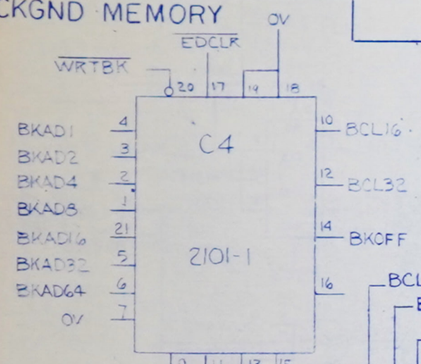

BACKGROUND CHAR. COLOR MUX

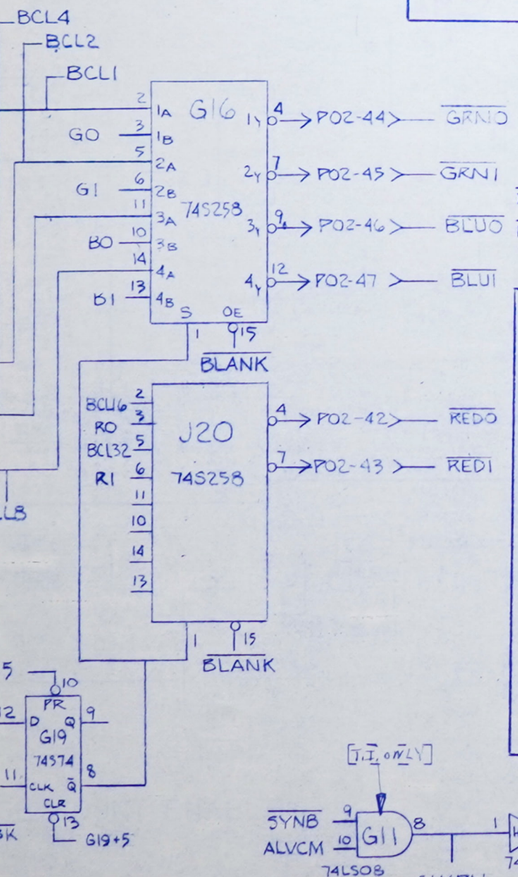

EDGE/COLOR LATCH

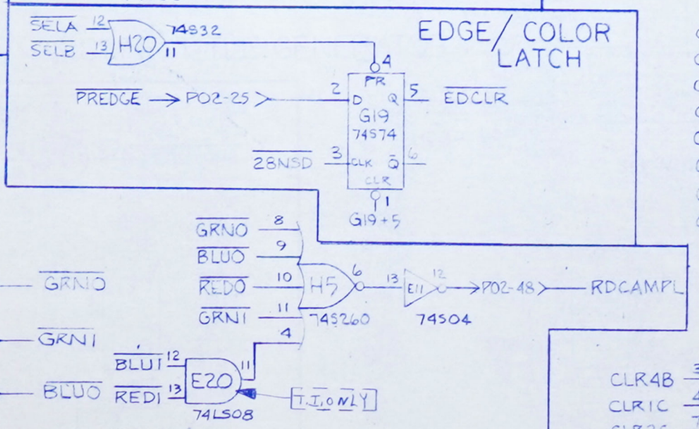

EDGE SELECTOR

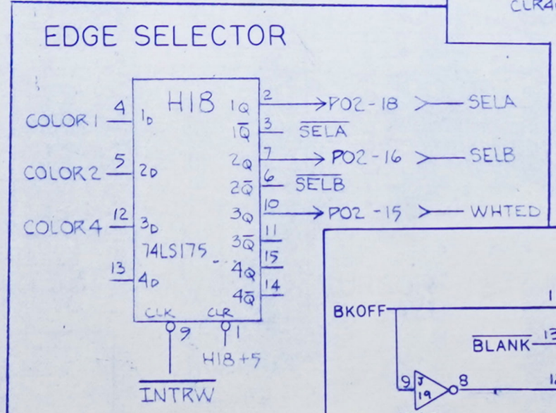

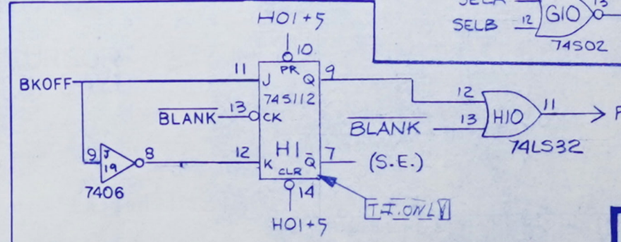

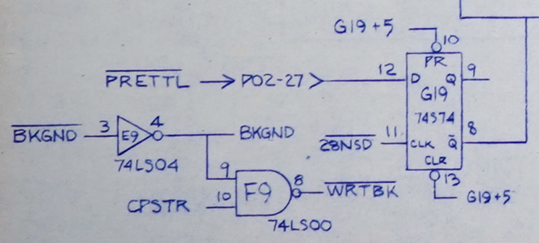

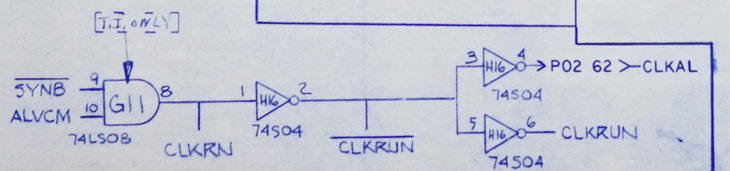

DELAY BANK

DELAY SELECTOR

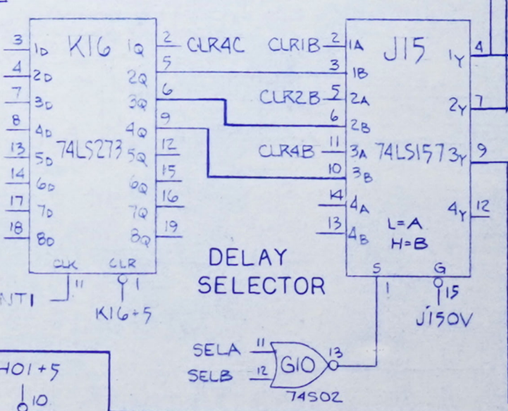

PALETTE KEY SPECIFIER

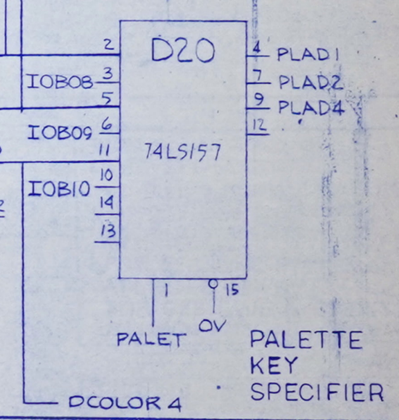

CHYRON TELESYSTEMS
265 Spagnoli Road
Melville, New York 11747

TITLE CHARACTOR GENERATOR J5 J6 NEW R.G.U. 2

C 2A0 04/6 REV A D

SHEET 8 OF 11

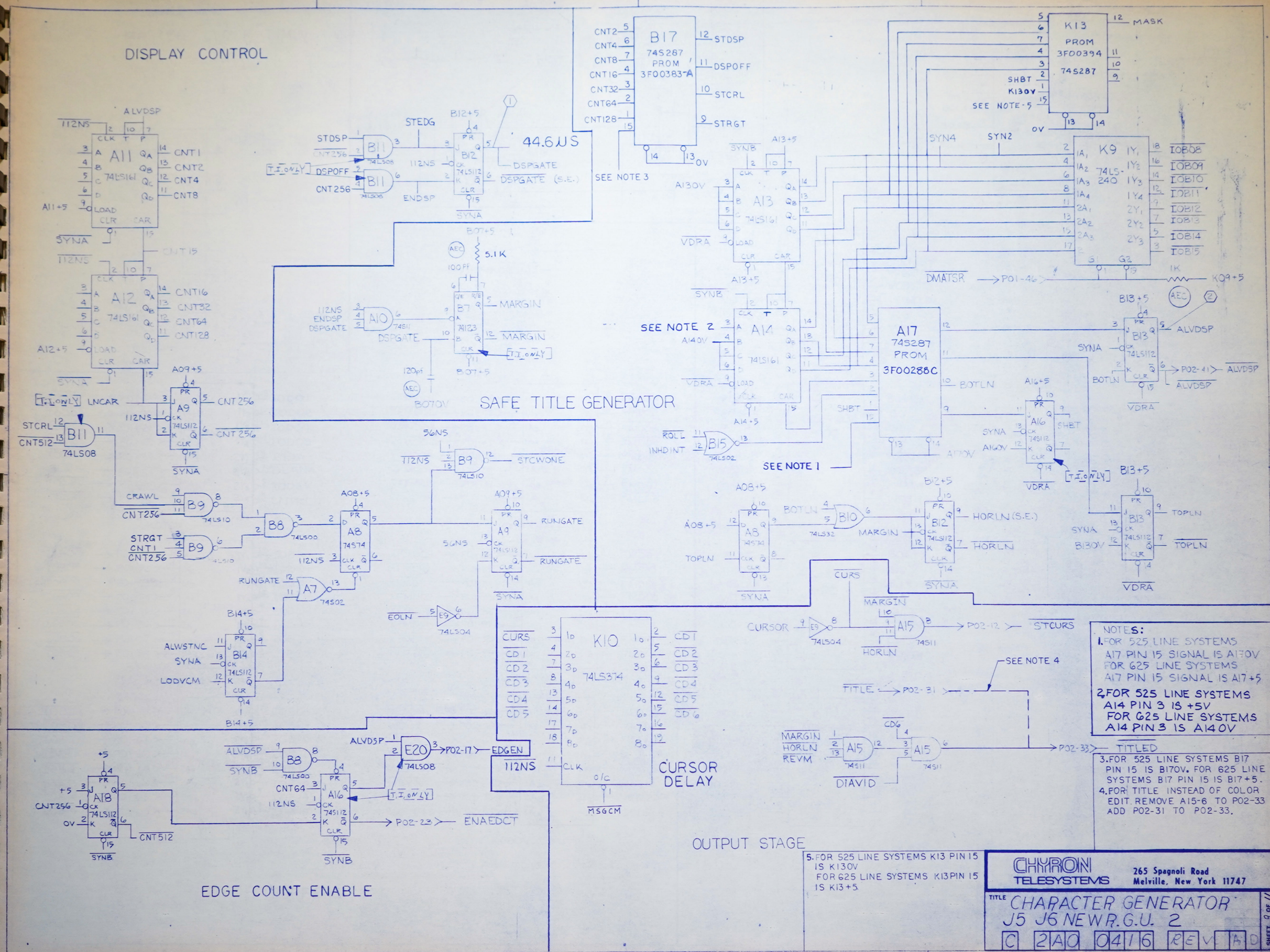
DISPLAY CONTROL
SAFE TITLE GENERATOR
EDGE COUNT ENABLE
CURSOR DELAY
OUTPUT STAGE
44.6 µS
B17 74S287 PROM 3F00383-A
K13 PROM 3F00394 74S287
K9 74LS-240
A17 74S287 PROM 3F00288C
K10 74LS374
A11 74LS161
A12 74LS161
A13 74LS161
A14 74LS161
A8 74S74
A9 74LS112
A16 74S112
A18 74LS112
B11 74LS08
B12 74LS112
B13 74LS112
B14 74LS112
B15 74LS02
B8 74LS00
B9 74LS10
B10 74LS32
B7 74123
A10 74S11
A7 74S02
E9 74LS04
E20 74LS08
A15 74S11
SEE NOTE 1
SEE NOTE 2
SEE NOTE 3
SEE NOTE 4
SEE NOTE-5
NOTES:
1. FOR 525 LINE SYSTEMS A17 PIN 15 SIGNAL IS A170V FOR 625 LINE SYSTEMS A17 PIN 15 SIGNAL IS A17+5
2. FOR 525 LINE SYSTEMS A14 PIN 3 IS +5V FOR 625 LINE SYSTEMS A14 PIN 3 IS A140V
3. FOR 525 LINE SYSTEMS B17 PIN 15 IS B170V. FOR 625 LINE SYSTEMS B17 PIN 15 IS B17+5.
4. FOR TITLE INSTEAD OF COLOR EDIT REMOVE A15-6 TO P02-33 ADD P02-31 TO P02-33.
5. FOR 525 LINE SYSTEMS K13 PIN 15 IS K130V FOR 625 LINE SYSTEMS K13 PIN 15 IS K13+5
CHYRON TELESYSTEMS
265 Spagnoli Road Melville, New York 11747
TITLE CHARACTER GENERATOR J5 J6 NEW R.G.U. 2
C 2A0 0416 REV A D
SHEET 9 OF 11

MASTER CLOCK TIMING

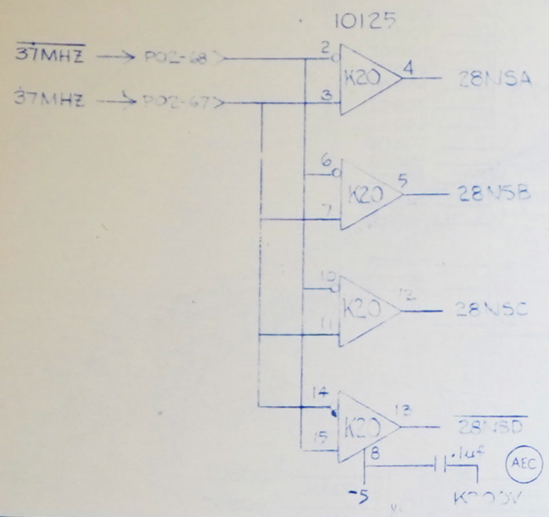

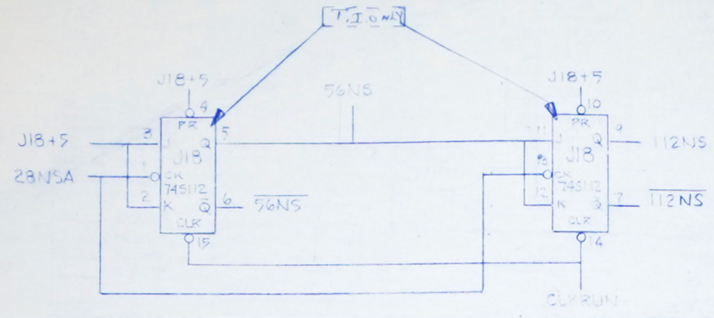

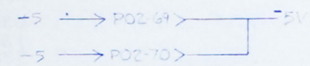

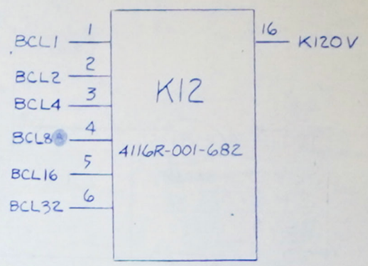

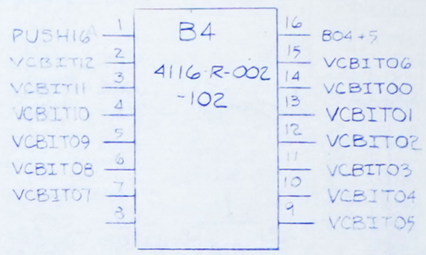

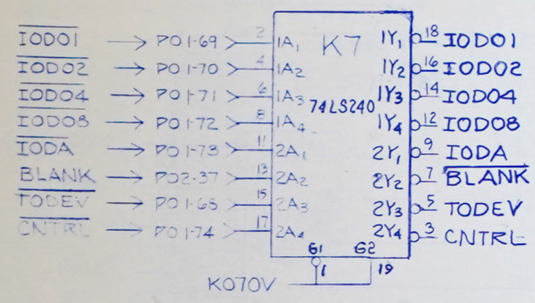

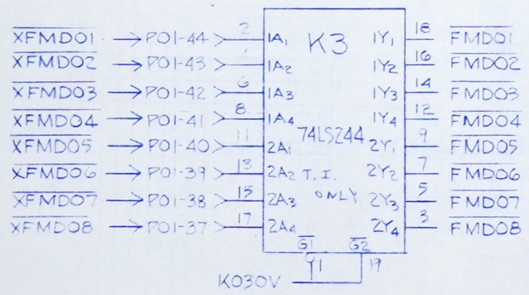

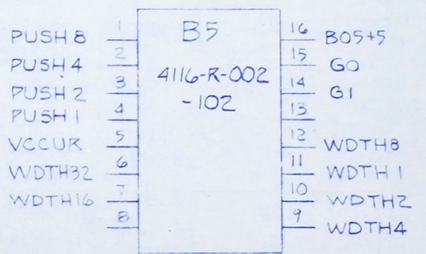

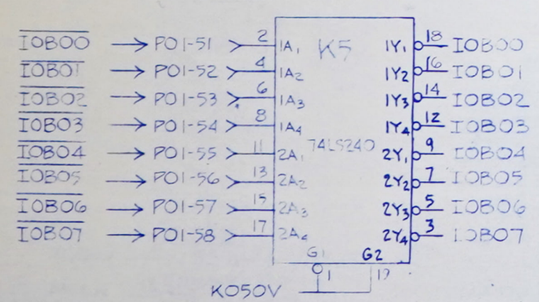

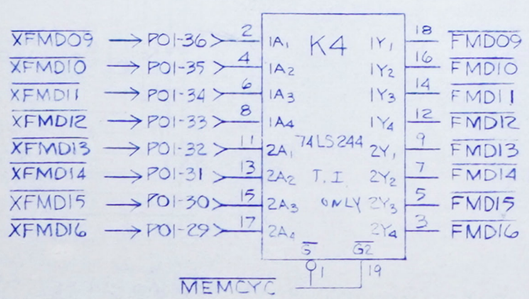

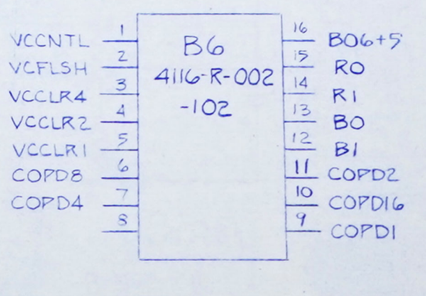

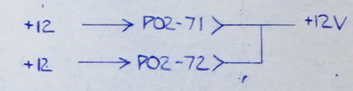

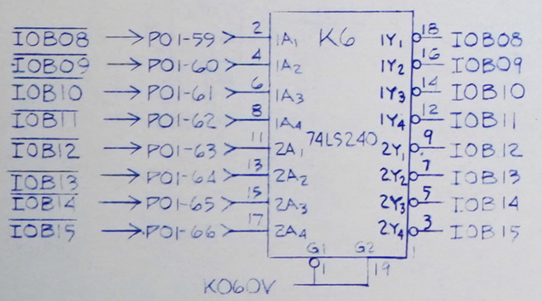

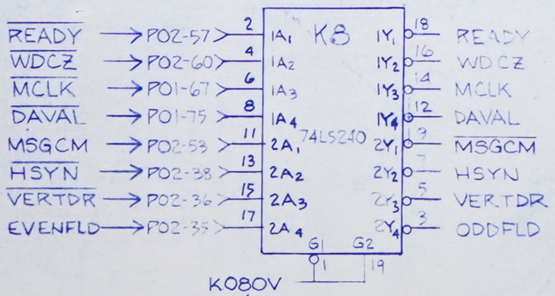

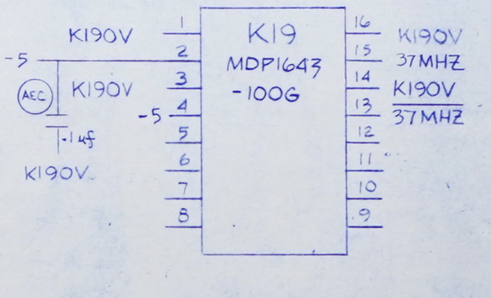

BUFFERS

CHYRON TELESYSTEMS
265 Spagnoli Road
Melville, New York 11747

TITLE: CHARACTER GENERATOR J5 J6 NEW R.G.U. 2

C 2A0 0416 REV

SHEET # OF 11

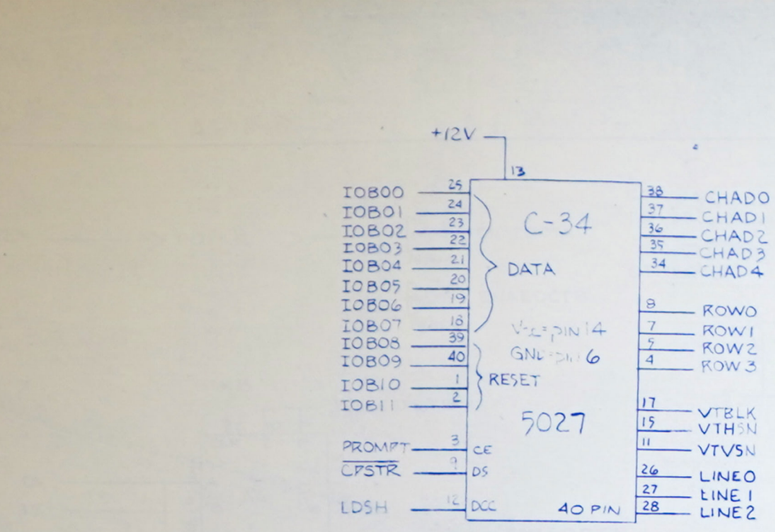

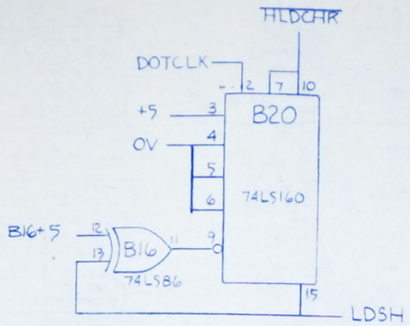

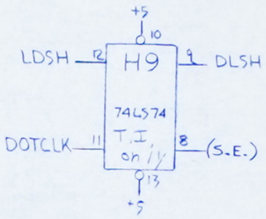

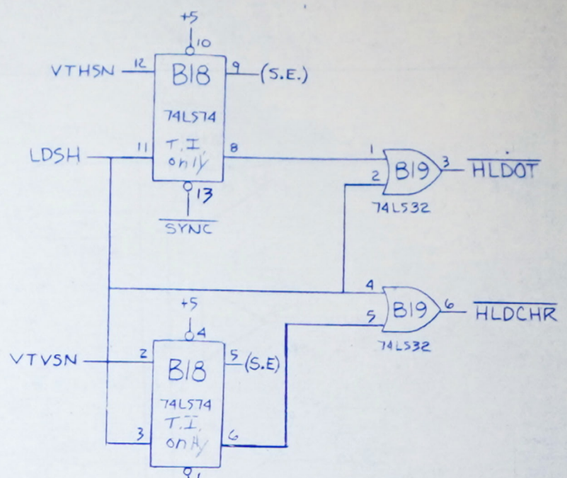

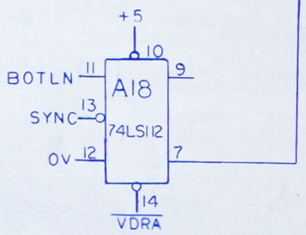

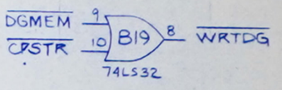

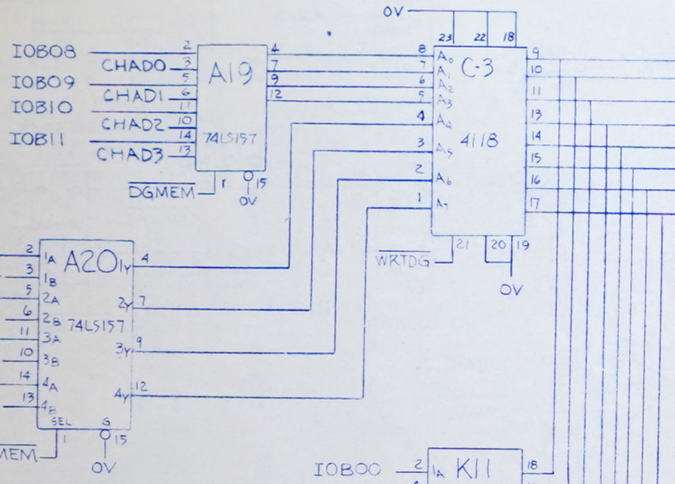

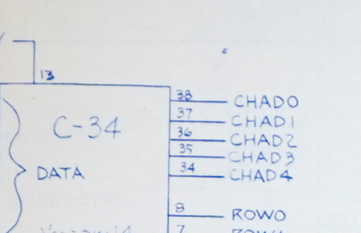

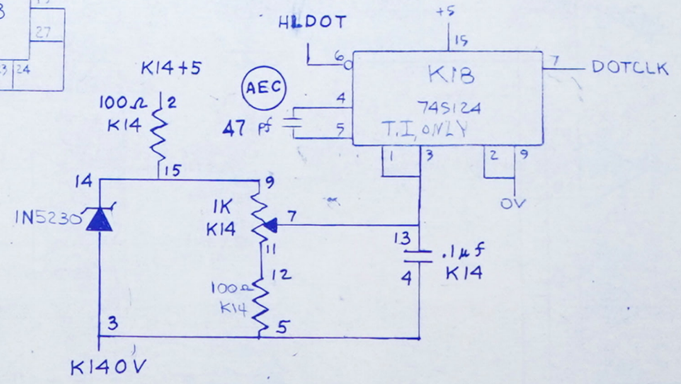

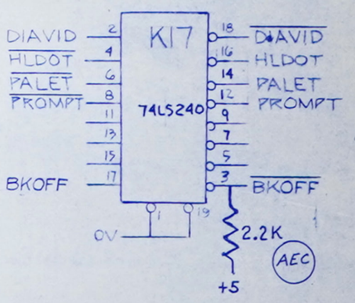

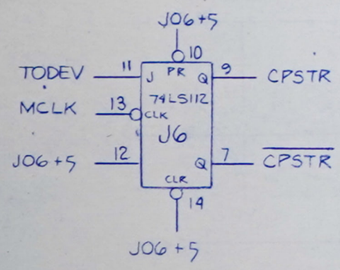

DIAGNOSTIC ROW GENERATOR

CHYRON TELESYSTEMS
265 Spagnoli Road
Melville, New York 11747

TITLE CHARACTER GENERATOR
J5 J6 NEW R.G.U. 2

C 2A0 0416 REV A D

SHEET 11 OF 11

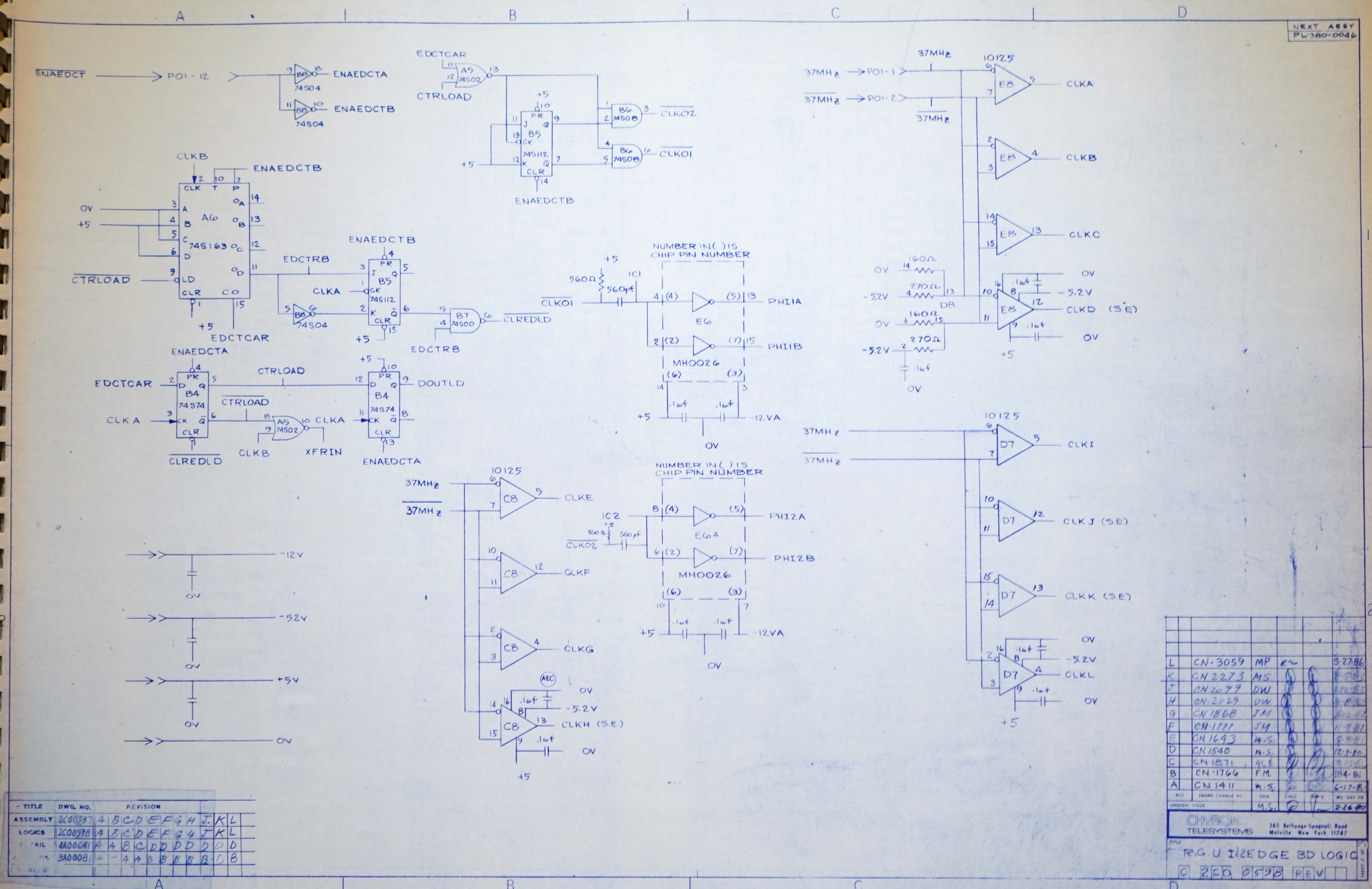

TITLE	DWG. NO.	REVISION										
ASSEMBLY	2C00587	A	B	C	D	E	F	G	H	J	K	L
LOGICS	2C00598	A	B	C	D	E	F	G	H	J	K	L
DETAIL	4A00641	A	A	B	C	D	D	D	D	D	D	D
[illegible]	3A00081	-	-	A	A	B	B	B	B	B	B	B

REV	ENGRG CHANGE NO	DWN	CHKD	APP'D	MO DAY YR
L	CN-3059	MP			3-27-86
K	CN 2273	MS			8-5-83
J	CN 2099	DW			1-12-83
H	CN-2029	DW			10-8-83
G	CN 1868	JM			[illegible]
F	CN-1777	JM			11-4-81
E	CN 1643	M.S.			5-8-81
D	CN 1540	M.S.			12-3-80
C	CN 1871	[illegible]			[illegible]
B	CN-1766	F.M.			11-4-81
A	CN 1411	M.S.			6-17-81
ORIGINAL ISSUE		M.S.			2-26-80

CHYRON TELESYSTEMS
265 Bethpage-Spagnoli Road
Melville, New York 11747

TITLE
R.G.U I&2 EDGE BD LOGIC
C 2C0 0598 REV

SHEET 1 OF 3

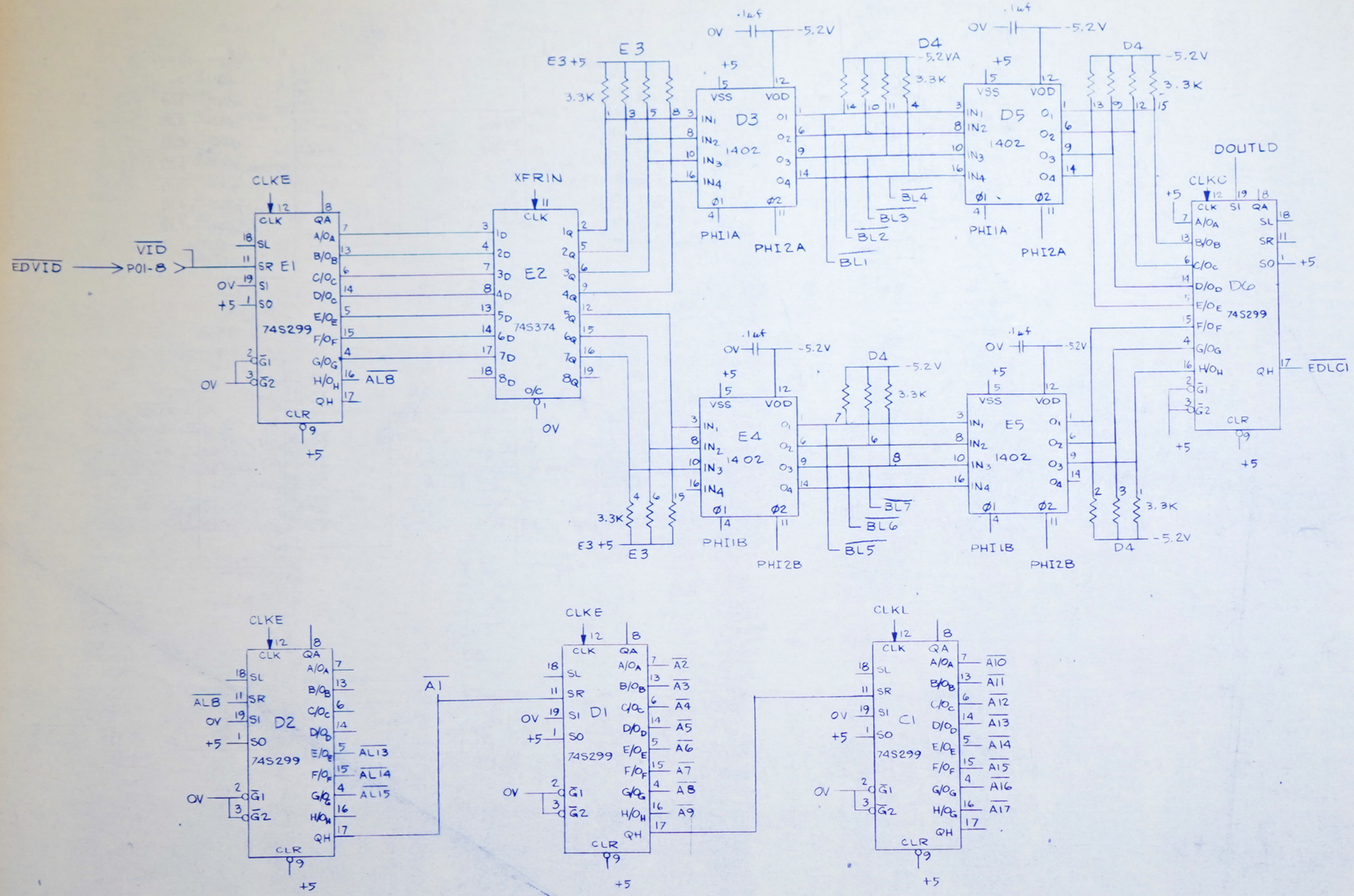

ORIGINAL ISSUE

CANRON TELESYSTEMS
265 Bethpage-Spagnoli Road
Melville New York 11747

TITLE RGUI#2 EDGE BD LOGIC

C 2CO 0598 L

SHEET 2 of 3

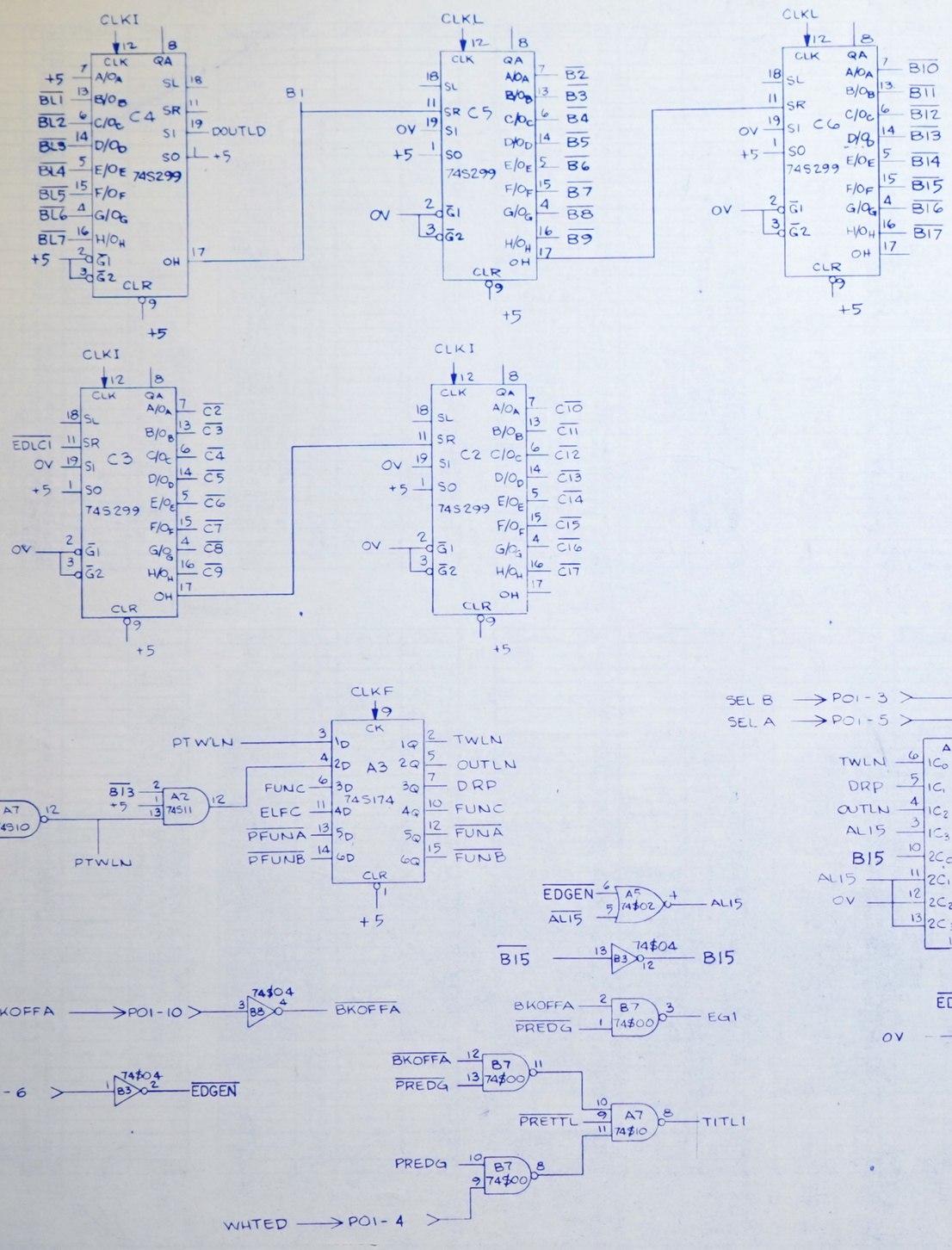

ORIGINAL ISSUE

CHYRON TELESYSTEMS 265 Bethpage-Spagnoli Road Melville, New York 11747

TITLE REGULZ EDGE BD LOGIC

C 2CO 0598 L

SHEET 3 OF 3

J1-01

SIGNAL	PIN	FROM	TO
OV	2		
+5	4		
-12V	6		
OV	8		4-1-1
+12V	10		
	12		
	14		
	16		
	18		
	20		
	22		
	24		
	26		
	28		
CHYDRDY	30		12-A-03
DIGIAK*	32		12-A-05
	34		
	36		
	38		
	40		
ENCVID1	42		12-A-22
ENCVID2	44		12-A-16
ENCVID3	46		12-A-20
IODD*	48		2-1-48
IODB*	50		2-01-50
IOB01*	52		2-01-52
IOB03*	54		2-01-54
IOB05*	56		2-01-56
IOB07*	58		2-01-58
IOB09*	60		2-01-60
IOB11*	62		2-01-62
IOB13*	64		2-01-64
IOB15*	66		2-01-66
TODEV*	68		2-01-68
IOD02*	70		2-01-70
IOD08*	72		2-01-72
CNTRL*	74		2-01-74
IORST*	76		2-01-76
+5V	78		
OV	80		

SIGNAL	PIN	FROM	TO
OV	1		
+5V	3		
-12V	5		
OV	7		
+12V	9		
	11		
DIGDTAØ	13		12-A-14
DIGDTA1	15		12-A-12
	17		
DIGDTA2	19		12-A-10
DIGDTA3	21		12-A-8
IOACK*	23		2-01-23
DIGDTA4	25		12-A-06
DIGDTA5	27		12-A-04
DIGDTA6	29		12-A-02
DIGDTA7	31		12-A-01
MCLK*	33		2-01-33
CHYACK*	35		12-A-09
DIGIDRDY	37		12-A-07
EXECA*	39		2-01-39
ENCVIDØ	41		12-A-18
T$R*	43		2-01-43
DIGIDOW	45		12-A-24
STIN6*	47		2-02-48
IODC*	49		2-01-49
IOB00*	51		2-01-51
IOB02*	53		2-01-53
IOB04*	55		2-01-55
IOB06*	57		2-01-57
IOB08*	59		2-01-59
IOB10*	61		2-01-61
IOB12*	63		2-01-63
IOB14*	65		2-01-65
FRDEV*	67		2-01-67
IOD01*	69		2-01-69
IOD04*	71		2-01-71
IODA*	73		2-01-73
	75		
+5V	77		
OV	79		

J2-01

SIGNAL	PIN	FROM	TO
OV	2		
+5	4		
-12.	6		
	8		
+12	10		
	12		
	14		
	16		
LLDHD*	18		J8-18
LINDEX*	20		J8-20
LRDY*	22		J8-22
	24		
L$L1*	26		J8-26
L$L2*	28		J8-28
L$L3*	30		J8-30
L$L4*	32		J8-32
LDIRIN*	34		J8-34
L$TP*	36		J8-36
LWRDT*	38		J8-38
LWRGT*	40		J8-40
LTRK00*	42		J8-42
LWRPRT*	44		J8-44
LRDT*	46		J8-46
IODD*	48	1-01-48	3-1-48
IODB*	50	1-01-50	3-1-50
IOB01*	52	1-01-52	3-1-52
IOB03*	54	1-01-54	3-1-54
IOB05*	56	1-01-56	3-1-56
IOB07*	58	1-01-58	3-1-58
IOB09*	60	1-01-60	3-1-60
IOB11*	62	1-01-62	3-1-62
IOB13*	64	1-01-64	3-1-64
IOB15*	66	1-01-66	3-1-66
TODEV*	68	1-01-68	3-1-68
IOD02*	70	1-01-70	3-1-70
IOD08*	72	1-01-72	3-1-72
CNTRL*	74	1-01-74	3-1-74
IORST*	76	1-01-76	3-1-76
+5	78		
OV	80		

SIGNAL	PIN	FROM	TO
OV	1		
+5	3		
-12	5		
	7		
+12	9		
	11		
	13		
	15		
	17		
	19		
	21		
IOACK*	23	1-01-23	3-1-23
	25		
	27		
	29		
	31		
MCLK*	33	1-01-33	3-1-33
	35		
	37		
EXECA*	39	1-01-39	3-1-11
	41		
T$R*	43	1-01-43	3-1-43
ROLCRL*	45		5-1-45
	47		
IODC*	49	1-01-49	3-1-49
IOB00*	51	1-01-51	3-1-51
IOB02*	53	1-01-53	3-1-53
IOB04*	55	1-01-55	3-1-55
IOB06*	57	1-01-57	3-1-57
IOB08*	59	1-01-59	3-1-59
IOB10*	61	1-01-61	3-1-61
IOB12*	63	1-01-63	3-1-63
IOB14*	65	1-01-65	3-1-65
FRDEV*	67	1-01-67	3-1-67
IOD01*	69	1-01-69	3-1-69
IOD04*	71	1-01-71	3-1-71
IODA*	73	1-01-73	3-1-73
	75		
+5	77		
OV	79		

J3-01

SIGNAL	PIN	FROM	TO
OV	2		
+5	4		
-12	6		
	8		
+12	10		
MAD00	12		4-2-68
MAD01	14		4-2-67
MAD02	16		4-2-66
MAD03	18		4-2-65
MAD04	20		4-2-64
MAD05	22		4-2-63
MAD06	24		4-2-62
MAD07	26		4-2-61
MAD08	28		4-2-60
MAD09	30		4-2-59
MAD10	32		4-2-58
MAD11	34		4-2-57
MAD12	36		4-2-56
MAD13	38		4-2-55
MAD14	40		4-2-12
	42		
DMATSR	44		5-1-46
	46		
IODD*	48	2-1-48	
IODB*	50	2-1-50	5-1-50
IOB01*	52	2-1-52	4-1-50
IOB03*	54	2-1-54	4-1-52
IOB05*	56	2-1-56	4-1-54
IOB07*	58	2-1-58	4-1-56
IOB09*	60	2-1-60	4-1-58
IOB11*	62	2-1-62	4-1-60
IOB13*	64	2-1-64	4-1-64
IOB15*	66	2-1-66	4-1-66
TODEV*	68	2-1-68	5-1-68
IOD02*	70	2-1-70	5-1-70
IOD08*	72	2-1-72	5-1-72
CNTRL*	74	2-1-74	5-1-74
IORST*	76	2-1-76	
+5	78		
OV	80		

SIGNAL	PIN	FROM	TO
OV	1		
+5	3		
-12	5		
	7		
+12	9		
EXECA*	11	2-1-39	
	13		
	15		
	17		
FNTRD	19		
	21		
IOACK*	23	2-1-23	
	25		
	27		
	29		
	31		
MCLK*	33	2-1-33	5-1-67
	35		
WAITA	37		4-2-34
OV	39		
WAITB	41		4-1-27
T$R*	43	2-1-43	
DAVAL*	45		5-1-75
WRITE*	47		4-2-9
IODC*	49	2-1-49	
IOB00*	51	2-1-51	4-1-49
IOB02*	53	2-1-53	4-1-51
IOB04*	55	2-1-55	4-1-53
IOB06*	57	2-1-57	4-1-55
IOB08*	59	2-1-59	4-1-57
IOB10*	61	2-1-61	4-1-59
IOB12*	63	2-1-63	4-1-63
IOB14*	65	2-1-65	4-1-65
FRDEV*	67	2-1-67	
IOD01*	69	2-1-69	5-1-69
IOD04*	71	2-1-71	5-1-7
IODA*	73	2-1-73	5-1-73
RPX*	75		4-2-8
+5	77		
OV	79		

J1-02

SIGNAL	PIN	FROM	TO
OV	2		
+5V	4		
MBLANK	6		10-02-01
	8		
	10		
MRED0A*	12		10-02-13
MRED1A*	14		10-02-15
MGREEN0A*	16		10-02-17
MGREEN1A*	18		10-02-19
MBLUE0A*	20		10-02-20
MBLUE1A*	22		10-02-18
M1TITLE*	24		10-02-09
M1EDGE*	26		10-02-05
MRED2A	28		
MRED0B*	30		10-02-33
MRED1B*	32		10-02-35
MGREEN0B*	34		10-02-37
MGREEN1B*	36		10-02-39
MBLUE0B*	38		10-02-40
MBLUE1B*	40		10-02-38
M2TITLE*	42		10-02-29
M2EDGE*	44		10-02-25
MGREEN2A	46		
MEDITA*	48		10-02-07
MSTCURSA*	50		10-02-11
MEDITB*	52		10-02-27
MSTCURSB*	54		10-02-31
MBLUE2A	56		
MRDCAMPL1	58		10-02-12
MRDCAMPL2	60		10-02-32
MRED2B	62		
VERTDR*	64		2-02-36
MGREEN2B	66		
MBLUE2B	68		
-5V	70		
+12	72		
OV	74		
-12	76		
+5	78		
0	80		

SIGNAL	PIN	FROM	TO
OV	1		
+5	3		
BLANKM	5		11-2-01
COSYN*	7	7-1-13	1-2-09
COSYN*	9	1-2-7	2-2-37
RED0AM*	11		11-2-13
RED1AM*	13		11-2-15
GREEN0AM*	15		11-2-17
GREEN1AM*	17		11-2-19
BLUE0AM*	19		11-2-20
BLUE1AM*	21		11-2-18
1TITLEM*	23		11-2-09
1EDGEM*	25		11-2-05
RED2AM	27		
RED0BM*	29		11-2-33
RED1BM*	31		11-2-35
GREEN0BM*	33		11-2-37
GREEN1BM*	35		11-2-39
BLUE0BM*	37		11-2-40
BLUE1BM*	39		11-2-38
2TITLEM*	41		11-2-29
2EDGEM*	43		11-2-25
GREEN2AM	45		
EDITAM*	47		11-2-07
STCURSAM*	49		11-02-11
EDITBM*	51		11-02-27
STCURSBM*	53		11-02-31
BLUE2AM	55		
RDCAMPL1M	57		11-02-12
RDCAMPL2M	59		11-02-32
	61		
EVEN FLD	63		2-2-35
	65		
	67		
-5V	69		
-12V	71		
OV	73		
-12V	75		
+5V	77		
0	79		

J2-02

SIGNAL	PIN	FROM	TO
OV	2		
+5	4		
	6		
	8		
	10		
	12		
	14		
SUBTIT	16		5-2-40
MSGCM	18		3-2-53
ALVD$PB*	20		6-2-41
DIRINA*	22		J9-2
INDEX*	24		J9-23
$ELX2*	26		J9-1
$ELX4*	28		J9-7
D$GND	30		
D$GND	32		
DINT2*	34		3-2-58
VERTDR*	36	1-02-64	5-2-36
HSYN*	38		5-2-38
CHY+5	40		J9-8
$TIN0*	42		3-2-42
$TIN2*	44		3-2-44
$TIN4*	46		3-2-46
$TIN6*	48	1-01-47	3-2-48
WRTPRT*	50		J9-11
REDDAT*	52		J9-19
WRDATD*	54		J9-15
DRDYG*	56		J9-25
PRI$W1*	58		J23-12
PRI$W2*	60		J23-14
$DFKBD1	62		J23-16
$DFKBD2	64		J23-18
$DTKBD1	66		J23-20
$DTKBD2	68		J23-22
-5	70		
+12	72		
	74		
-12	76		
+5	78		
OV	80		

SIGNAL	PIN	FROM	TO
OV	1		
+5	3		
	5		
	7		
	9		
	11		
	13		
	15		
	17		
	19		
$TEP*	21		J9-4
LODHD*	23		J9-3
$ELX1*	25		J9-5
$ELX3*	27		J9-9
D$GND	29		
D$GND	31		
DINT1*	33		3-2-56
EVENFLD	35	1-02-63	5-2-35
CO$YN*	37	1-02-09	11-2-3
ALVD$PA*	39		5-1-41
$TIN1*	41		3-2-41
$TIN3*	43		3-2-43
$TIN5*	45		3-2-45
$TIN7*	47		3-2-47
WRGATA*	49		J9-6
REDDAT	51		J9-17
WRDATD	53		J9-13
TRK00*	55		J9-21
EN$W1*	57		J23-11
EN$W2*	59		J23-13
$DFKBD1*	61		J23-15
$DFKBD2*	63		J23-17
$DTKBD1*	65		J23-19
$DTKBD2*	67		J23-21
-5	69		
+12	71		
	73		
-12	75		
+5	77		
OV	79		

J3-02

SIGNAL	PIN	FROM	TO
OV	2		
+5	4		
	6		
	8		
DTMM00	10		4-2-32
DTMM01	12		4-2-31
DTMM02	14		4-2-30
DTMM03	16		4-2-29
DTMM04	18		4-2-28
DTMM05	20		4-2-27
DTMM06	22		4-2-26
DTMM07	24		4-2-25
DTMM08	26		4-2-24
DTMM09	28		4-2-23
DTMM10	30		4-2-22
DTMM11	32		4-2-21
DTMM12	34		4-2-18
DTMM13	36		4-2-17
DTMM14	38		4-2-16
DTMM15	40		4-2-15
$TIN0*	42	2-2-42	
$TIN2*	44	2-2-44	
$TIN4*	46	2-2-46	
$TIN6*	48	2-2-48	
DTMM16	50		4-2-14
FNTLOD	52		5-2-52
	54		
DINT1*	56	2-2-33	5-2-54
DINT2*	58	2-2-34	6-2-54
WDCZ*	60		5-2-60
HLDIO*	62		
	64		
	66		
	68		
-5	70		
+12	72		
	74		
-12	76		
+5	78		
OV	80		

SIGNAL	PIN	FROM	TO
OV	1		
+5	3		
	5		
XREFA*	7		4-2-11
XDFMM00	9		4-2-52
XDFMM01	11		4-2-51
XDFMM02	13		4-2-50
XDFMM03	15		4-2-49
XDFMM04	17		4-2-48
XDFMM05	19		4-2-47
XDFMM06	21		4-2-46
XDFMM07	23		4-2-45
XDFMM08	25		4-2-44
XDFMM09	27		4-2-43
XDFMM10	29		4-2-42
XDFMM11	31		4-2-41
XDFMM12	33		4-2-40
XDFMM13	35		4-2-39
XDFMM14	37		4-2-38
XDFMM15	39		4-2-37
$TIN1*	41	2-2-41	
$TIN3*	43	2-2-43	
$TIN5*	45	2-2-45	
$TIN7*	47	2-2-47	
XDFMM16	49		4-2-36
	51		
M$GCM	53	2-2-18	5-2-53
	55		
READY1*	57		5-2-57
READY2*	59		6-2-57
	61		
	63		
	65		
	67		
-5	69		
+12	71		
	73		
-12	75		
+5	77		
OV	79		

E	CN-2898	RLC			6-10-85
D	CN-2336	F.M.			10-4-83
C	CN-2110	D.W			4-14-83
B	CN-2021	F.M.			9-28-82
A	ORIGINAL	RKL			2-24-82
		23			8-6-80

CHYRON TELESYSTEMS

BACKPLANE - RGU 2

C 2A0 0423

SHEET 1 OF 4

J4-01

SIGNAL	PIN	FROM	TO
0V	2	4-1-1	4-1-28
	4		
-12	6		
	8		
+12	10		
	12		
XFAD1*	14		5-1-14
XFAD3*	16		5-1-16
XFAD5*	18		5-1-18
XFAD7*	20		5-1-20
XFAD9*	22		5-1-22
XFAD11*	24		5-1-24
XFAD13*	26		5-1-26
0V	28	4-1-02	4-1-48
XFMD15*	30		5-1-30
XFMD13*	32		5-1-32
XFMD11*	34		5-1-34
XFMD09*	36		5-1-36
XFMD07*	38		5-1-38
XFMD05*	40		5-1-40
XFMD03*	42		5-1-42
XFMD01*	44		5-1-44
	46		
0V	48	4-1-25	4-1-67
IOB01*	50	3-1-52	5-1-52
IOB03*	52	3-1-54	5-1-54
IOB05*	54	3-1-56	5-1-56
IOB07*	56	3-1-58	5-1-58
IOB09*	58	3-1-60	5-1-60
IOB11*	60	3-1-62	5-1-62
	62		
IOB13*	64	3-1-64	5-1-64
IOB15*	66	3-1-66	5-1-66
0V	68	4-1-67	4-1-71
REFR*	70		5-1-47
WRTEM*	72		5-1-48
0V	74	4-1-71	4-1-75
0V	76	4-1-75	4-1-79
+5	78		
0V	80	4-1-79	

SIGNAL	PIN	FROM	TO
0V	1		4-1-2
+5	3		
-12	5		
	7		
+12	9		
	11		
XFAD0*	13		5-1-13
XFAD2*	15		5-1-15
XFAD4*	17		5-1-17
XFAD6*	19		5-1-19
XFAD8*	21		5-1-21
XFAD10*	23		5-1-23
XFAD12*	25		5-1-25
WAITB	27		3-1-41
XFMD16*	29		5-1-29
XFMD14*	31		5-1-31
XFMD12*	33		5-1-33
XFMD10*	35		5-1-35
XFMD08*	37		5-1-37
XFMD06*	39		5-1-39
XFMD04*	41		5-1-41
XFMD02*	43		5-1-43
	45		
	47		
IOB00*	49	3-1-51	5-1-51
IOB02*	51	3-1-53	5-1-53
IOB04*	53	3-1-55	5-1-55
IOB06*	55	3-1-57	5-1-57
IOB08*	57	3-1-59	5-1-59
IOB10*	59	3-1-61	5-1-61
	61		
IOB12*	63	3-1-63	5-1-63
IOB14*	65	3-1-65	5-1-65
0V	67	4-1-48	4-1-68
XFAD14*	69		5-1-28
0V	71	4-1-68	4-1-74
RP*	73		5-1-27
0V	75	4-1-74	4-1-76
+5	77		
0V	79	4-1-76	4-1-80

J5-01

SIGNAL	PIN	FROM	TO
0V	2		
+5	4		
	6		
	8		
	10		
	12		
XFAD1*	14	4-1-14	6-1-14
XFAD3*	16	4-1-16	6-1-16
XFAD5*	18	4-1-18	6-1-18
XFAD7*	20	4-1-20	6-1-20
XFAD9*	22	4-1-22	6-1-22
XFAD11*	24	4-1-24	6-1-24
XFAD13*	26	4-1-26	6-1-26
XFAD14*	28	4-1-69	6-1-28
XFMD15*	30	4-1-30	6-1-30
XFMD13*	32	4-1-32	6-1-32
XFMD11*	34	4-1-34	6-1-34
XFMD09*	36	4-1-36	6-1-36
XFMD07*	38	4-1-38	6-1-38
XFMD05*	40	4-1-40	6-1-40
XFMD03*	42	4-1-42	6-1-42
XFMD01*	44	4-1-44	6-1-44
DMATSR	46		3-1-44
WRTEM*	48	4-1-72	
IODB*	50	3-1-50	6-1-73
IOB01*	52	4-1-50	6-1-52
IOB03*	54	4-1-52	6-1-54
IOB05*	56	4-1-54	6-1-56
IOB07*	58	4-1-56	6-1-58
IOB09*	60	4-1-58	6-1-60
IOB11*	62	4-1-60	6-1-62
IOB13*	64	4-1-64	6-1-64
IOB15*	66	4-1-66	6-1-66
IODEV*	68	3-1-68	6-1-68
IOD02*	70	3-1-70	6-1-70
IOD08*	72	3-1-72	6-1-72
CNTRL*	74	3-1-74	6-1-74
	76		
+5	78		
0V	80		

SIGNAL	PIN	FROM	TO
0V	1		
+5	3		
	5		
	7		
	9		
	11		
XFAD0*	13	4-1-13	6-1-13
XFAD2*	15	4-1-15	6-1-15
XFAD4*	17	4-1-17	6-1-17
XFAD6*	19	4-1-19	6-1-19
XFAD8*	21	4-1-21	6-1-21
XFAD10*	23	4-1-23	6-1-23
XFAD12*	25	4-1-25	6-1-25
RP*	27	4-1-73	6-1-27
XFMD16*	29	4-1-29	6-1-29
XFMD14*	31	4-1-31	6-1-31
XFMD12*	33	4-1-33	6-1-33
XFMD10*	35	4-1-35	6-1-35
XFMD08*	37	4-1-37	6-1-37
XFMD06*	39	4-1-39	6-1-39
XFMD04*	41	4-1-41	6-1-41
XFMD02*	43	4-1-43	6-1-43
ROLCRL*	45	2-1-45	6-1-45
REFR*	47	4-1-70	
	49		
IOB00*	51	4-1-49	6-1-51
IOB02*	53	4-1-51	6-1-53
IOB04*	55	4-1-53	6-1-55
IOB06*	57	4-1-55	6-1-57
IOB08*	59	4-1-57	6-1-59
IOB10*	61	4-1-59	6-1-61
IOB12*	63	4-1-63	6-1-63
IOB14*	65	4-1-65	6-1-65
MCLK*	67	3-1-33	
IOD01*	69	3-1-69	6-1-69
IOD04*	71	3-1-71	6-1-71
IODA*	73		
DAVAL*	75	3-1-45	6-1-75
+5	77		
0V	79		

J6-01

SIGNAL	PIN	FROM	TO
0V	2		
+5	4		
	6		
	8		
	10		
	12		
XFAD1*	14	5-1-14	
XFAD3*	16	5-1-16	
XFAD5*	18	5-1-18	
XFAD7*	20	5-1-20	
XFAD9*	22	5-1-22	
XFAD11*	24	5-1-24	
XFAD13*	26	5-1-26	
XFAD14*	28	5-1-28	
XFMD15*	30	5-1-30	
XFMD13*	32	5-1-32	
XFMD11*	34	5-1-34	
XFMD09*	36	5-1-36	
XFMD07*	38	5-1-38	
XFMD05*	40	5-1-40	
XFMD03*	42	5-1-42	
XFMD01*	44	5-1-44	
	46		
	48		
	50		
IOB01*	52	5-1-52	
IOB03*	54	5-1-54	
IOB05*	56	5-1-56	
IOB07*	58	5-1-58	
IOB09*	60	5-1-60	
IOB11*	62	5-1-62	
IOB13*	64	5-1-64	
IOB15*	66	5-1-66	
IODEV*	68	5-1-68	
IOD02*	70	5-1-70	
IOD08*	72	5-1-72	
CNTRL*	74	5-1-74	
	76		
+5	78		
0V	80		

SIGNAL	PIN	FROM	TO
0V	1		
+5	3		
	5		
	7		
	9		
	11		
XFAD0*	13	5-1-23	
XFAD2*	15	5-1-15	
XFAD4*	17	5-1-17	
XFAD6*	19	5-1-19	
XFAD8*	21	5-1-21	
XFAD10*	23	5-1-23	
XFAD12*	25	5-1-25	
RP*	27	5-1-27	
XFMD16*	29	5-1-29	
XFMD14*	31	5-1-31	
XFMD12*	33	5-1-33	
XFMD10*	35	5-1-35	
XFMD08*	37	5-1-37	
XFMD06*	39	5-1-39	
XFMD04*	41	5-1-41	
XFMD02*	43	5-1-43	
ROLCRL*	45	5-1-45	
	47		
	49		
IOB00*	51	5-1-51	
IOB02*	53	5-1-53	
IOB04*	55	5-1-55	
IOB06*	57	5-1-57	
IOB08*	59	5-1-59	
IOB10*	61	5-1-61	
IOB12*	63	5-1-63	
IOB14*	65	5-1-65	
MCLK*	67	5-1-67	
IOD01*	69	5-1-69	
IOD04*	71	5-1-71	
IODB*	73	5-1-50	
DAVAL*	75	5-1-75	
+5	77		
0V	79		

J4-02

SIGNAL	PIN	FROM	TO
0V	2	4-2-1	4-2-5
+5	4		
0V	6	4-2-5	4-2-7
RPX*	8	3-1-25	
	10		
MAD14	12	3-1-40	
DTMM16	14	3-2-50	
DTMM14	16	3-2-38	
DTMM12	18	3-2-34	
0V	20	4-2-19	4-2-33
DTMM10	22	3-2-30	
DTMM08	24	3-2-26	
DTMM06	26	3-2-22	
DTMM04	28	3-2-18	
DTMM02	30	3-2-14	
DTMM00	32	3-2-10	
WAITA	34	3-1-37	
XDFMM16	36	3-2-49	
XDFMM14	38	3-2-37	
XDFMM12	40	3-2-33	
XDFMM10	42	3-2-29	
XDFMM08	44	3-2-25	
XDFMM06	46	3-2-21	
XDFMM04	48	3-2-17	
XDFMM02	50	3-2-13	
XDFMM00	52	3-2-9	
0V	54	4-2-53	4-2-79
MAD12	56	3-1-36	
MAD10	58	3-1-32	
MAD08	60	3-1-28	
MAD06	62	3-1-24	
MAD04	64	3-1-20	
MAD02	66	3-1-16	
MAD00	68	3-1-12	
	70		
+12	72		
	74		
-12	76		
+5	78		
0V	80	4-2-79	

SIGNAL	PIN	FROM	TO
0V	1	4-1-80	4-2-2
+5	3		
0V	5	4-2-2	4-2-6
0V	7	4-2-6	4-2-19
WRITE*	9	3-1-47	
XREFA*	11	3-2-7	
DTMM17	13		
DTMM15	15	3-2-40	
DTMM13	17	3-2-36	
0V	19	4-2-7	4-2-26
DTMM11	21	3-2-32	
DTMM09	23	3-2-28	
DTMM07	25	3-2-24	
DTMM05	27	3-2-20	
DTMM03	29	3-2-16	
DTMM01	31	3-2-12	
0V	33	4-2-20	4-2-53
	35		
XDFMM15	37	3-2-39	
XDFMM13	39	3-2-35	
XDFMM11	41	3-2-31	
XDFMM09	43	3-2-27	
XDFMM07	45	3-2-23	
XDFMM05	47	3-2-19	
XDFMM03	49	3-2-15	
XDFMM01	51	3-2-11	
0V	53	4-2-33	4-2-54
MAD13	55	3-1-38	
MAD11	57	3-1-34	
MAD09	59	3-1-30	
MAD07	61	3-1-26	
MAD05	63	3-1-22	
MAD03	65	3-1-18	
MAD01	67	3-1-14	
	69		
+12	71		
	73		
-12	75		
+5	77		
0V	79	4-2-54	4-2-80

J5-02

SIGNAL	PIN	FROM	TO
0V	2		
+5	4		
ENCH1	6		5-2-8
ENCH1	8	5-2-6	
EDIT1*	10		J7-9
$TCUR$1*	12		J7-11
C37MHZ	14		ECL-8
$ELB1	16		
$ELA1	18		
0V	20		
0V	22		
0V	24		
0V	26		
0V	28		
0V	30		
0V	32		
	34		
VERTDR*	36	2-2-36	6-2-36
H$YN*	38	2-2-38	6-2-38
SUBTIT	40	2-2-16	6-2-40
REDOA*	42		J7-13
GREENOA*	44		J7-17
BLUEOA*	46		J7-20
RDCAMPL1	48	7-12	
	50		
FNTLOD	52	3-2-52	6-2-52
DINT1*	54	3-2-56	
	56		
	58		
WDCZ*	60	3-2-60	6-2-60
CLKAL	62		ECL-3
	64		
	66		
A37MHZ*	68		ECL-5
-5	70		
+12	72		
	74		
	76		
+5	78		
0V	80		

SIGNAL	PIN	FROM	TO
0V	1		
+5	3		
	5		
ENCH2	7		6-2-6
	9		
	11		
C37MHZ*	13		ECL-9
WHTEQ1	15		
EDGEN1	17		
EDVID1*	19		
BKOFF1	21		
ENAEDCT1*	23		
PREDG1*	25		
PRETTL1*	27		
EDGE1*	29		J7-5
TITLE1*	31		
1TITLED*	33		J7-9
EVENFLD	35	2-2-35	6-2-35
BLANK	37		6-2-37
	39		
ALVD$PA*	41	2-2-59	
REDIA*	43		7-15
GREENIA*	45		7-19
BLUEIA*	47		7-18
	49		
	51		
M$GCM	53	3-2-53	6-2-53
	55		
READY1*	57	3-2-57	
	59		
	61		
	63		
	65		
A37MHZ	67		ECL-4
-5	69		
+12	71		
	73		
	75		
+5	77		
0V	79		

J6-02

SIGNAL	PIN	FROM	TO
0V	2		
+5	4		
ENCH2	6	5-2-7	
	8		
EDIT2*	10		J7-27
$TCUR$2*	12		J7-31
D37MHZ	14		ECL-10
$ELB2	16		
$ELA2	18		
0V	20		
0V	22		
0V	24		
0V	26		
0V	28		
0V	30		
0V	32		
	34		
VERTDR*	36	5-2-36	
H$YN*	38	5-2-38	
SUBTIT	40	5-2-40	
REDOB*	42		J7-33
GREENOB*	44		J7-37
BLUEOB*	46		J7-40
RDCAMPL2	48	7-32	
	50		
FNTLOD	52	6-2-52	
DINTA*	54	3-2-58	
	56		
	58		
WDCZ*	60	5-2-60	
	62		
	64		
	66		
B37MHZ*	68		ECL-7
-5	70		
+12	72		
	74		
	76		
+5	78		
0V	80		

SIGNAL	PIN	FROM	TO
0V	1		
+5	3		
	5		
	7		
	9		
	11		
D37MHZ*	13		ECL-11
WHTEQ2	15		
EDGEN2	17		
EDVID2*	19		
BKOFF2	21		
ENAEDCT2*	23		
PREDG2*	25		
PRETTL2*	27		
EDGE2*	29		J7-25
TITLE2*	31		
2TITLED*	33		J7-29
EVENFLD	35	5-2-35	
BLANK	37	5-2-37	J7-1
	39		
ALVD$PB*	41	2-2-20	
REDIB*	43		7-35
GREENIB*	45		7-39
BLUEIB*	47		7-38
	49		
	51		
M$GCM	53	5-2-53	
	55		
READY2*	57	3-2-59	
	59		
	61		
	63		
	65		
B37MHZ	67		ECL-6
-5	69		
+12	71		
	73		
	75		
+5	77		
0V	79		

5-6-80

CHYRON TELESYSTEMS

BACKPLANE-RGU 2

C 2A0 04213 REV

2-4

— J7 —

SIGNAL	PIN	FROM	TO
0V (16AWG)	2	0V BUS	
0V	4	J7-2	
0V	6	J7-4	
0V	8	J7-6	
0V	10	J7-8	
RDCAMPL1	12	5-2-48	
0V	14	J7-10	
0V	16	J7-14	
BLUE1A *	18	5-2-47	
BLUE0A *	20	5-2-46	
0V	22	J7-16	
0V	24	J7-22	
0V	26	J7-24	
0V	28	J7-26	
0V	30	J7-28	
RDCAMPL2	32	6-2-48	
0V	34	J7-30	
0V (16AWG)	36	J7-34	0V BUS
BLUE1BX	38	6-2-47	
BLUE0BX	40	6-2-46	
	42		
	44		
	46		
	47		
	48		
	50		
	52		
	54		
	56		
	58		
	60		
	62		
	64		
	66		
	68		
	70		
	72		
	74		
	76		
	78		
	80		

SIGNAL	PIN	FROM	TO
BLANK	1	6-2-37	
COSYN *	3	1-2-7	
EDGE1 *	5	5-2-29	
EDIT1 *	7	5-2-10	
TITLED *	9	5-2-33	
STCURS1 *	11	5-2-12	
REDOA *	13	5-2-42	
REDIA *	15	5-2-43	
GREENOA *	17	5-2-44	
GREENIA *	19	5-2-45	
	21		
	23		
EDGE2 *	25	6-2-29	
EDIT2 *	27	6-2-10	
TITLED *	29	6-2-33	
STCURSX *	31	6-2-12	
REDOB *	33	6-2-42	
REDIB *	35	6-2-43	
GREENOB *	37	6-2-44	
GREENIB *	39	6-2-45	
	41		
	43		
	45		
	47		
	49		
	51		
	53		
	55		
	57		
	59		
	61		
	63		
	65		
	67		
	69		
	71		
	73		
	75		
	77		
	79		

— J8 —

SIGNAL	PIN	FROM	TO
	1		
	3		
	4		
	5		
	6		
	7		
	8		
	9		
	10		
	11		
	12		
	13		
	14		
	15		
	16		
LODHD *	18	2-1-18	
LINDEX *	20	2-1-20	
LRDY *	22	2-1-22	
	24		
LSEL1 *	26	2-1-26	
LSEL2 *	28	6-1-28	
LSEL3 *	30	6-1-30	
LSEL4 *	32	2-1-32	
LDIRIN *	34	2-1-34	
LSTEP *	36	2-1-36	
LWRDT *	38	2-1-38	
LWRGT *	40	2-1-40	
LTRKQD *	42	2-1-42	
LWRPRT *	44	2-1-44	
LRDT *	46	2-1-46	
	48		
	50		
	52		
	54		
	56		
	58		
	60		
	62		
	64		
	66		
	68		
	70		
	72		
	74		
	76		
	78		
	80		

SIGNAL	PIN	FROM	TO
	1		
	3		
	5		
	7		
	9		
0V	11		
0V	13	J8-11	
0V	15	J8-13	
0V	17	J8-15	
0V	19	J8-17	
0V	21	J8-19	
0V	23	J8-21	
0V	25	J8-23	
0V	27	J8-25	
0V	29	J8-27	
0V	31	J8-29	
0V	33	J8-31	
0V	35	J8-33	
0V	37	J8-35	
0V	39	J8-37	
0V	41	J8-39	
0V	43	J8-41	
0V	45	J8-43	
0V	47	J8-45	
0V	49	J8-47	
	51		
	53		
	55		
	57		
	59		
	61		
	63		
	65		
	67		
	69		
	71		
	73		
	75		
	77		
	79		

— J9 —

SIGNAL	PIN	FROM	TO
DKINA *	2	2-2-22	
STEP *	4	2-2-61	
WRGATA *	6	2-2-49	
CHY+5	8	2-2-40	
DSGND	10	J9-12	
DSGND	12	J9-14	
DSGND	14	J9-16	
DSGND	16	J9-18	
DSGND	18	J9-20	
DSGND	20	J9-22	
DSGND	22	J9-24	
DSGND	24	J9-26	
DSGND	26	TB1-10	
	28		
	30		
	32		
	34		
	36		
	38		
	40		
	42		
	44		
	46		
	48		
	50		
	52		
	54		
	56		
	58		
	60		
	62		
	64		
	66		
	68		
	70		
	72		
	74		
	76		
	78		
	80		

22 AWG SOLDERED

SIGNAL	PIN	FROM	TO
SELX2 *	1	2-2-26	
LODHD *	3	2-2-23	
SELX1 *	5	2-2-25	
SELX4 *	7	2-2-28	
SELX3 *	9	2-2-27	
WRTPRT *	11	2-2-50	
WRDATD	13	2-2-53	
WRDATD *	15	2-2-54	
REDDAT	17	2-2-51	
REDDAT *	19	2-2-52	
TRKQD *	21	2-2-55	
INDEX *	23	2-2-24	
DRDYQ *	25	2-2-56	
	27		
	29		
	31		
	33		
	35		
	37		
	39		
	41		
	43		
	45		
	47		
	49		
	51		
	53		
	55		
	57		
	59		
	61		
	63		
	65		
	67		
	69		
	71		
	73		
	75		
	77		
	79		

◇ THESE PINS ARE TO BE HANDWIRED TOGETHER.

— J10 —

SIGNAL	PIN	FROM	TO	
0V	2	◇	0V BUS	(22GA)
0V	4	◇	↑	
0V	6	◇	↑	
0V	8	◇	↑	
0V	10	◇	0V BUS	(22GA)
MRDCAMPL1	12	1-02-58		
	14			
	16			
MBLUE1A *	18	1-02-22		
MBLUE0A *	20	1-02-20		
0V	22	◇	0V BUS	(22GA)
0V	24	◇	↑	
0V	26	◇	↑	
0V	28	◇	↑	
0V	30	◇	0V BUS	(22GA)
MRDCAMPL2	32	1-02-60		
	34			
	36			
MBLUE1B *	38	1-02-40		
MBLUE0B *	40	1-02-38		
	42			
	44			
	46			
	48			
	50			
	52			
	54			
	56			
	58			
	60			
	62			
	64			
	66			
	68			
	70			
	72			
	74			
	76			
	78			
	80			

SIGNAL	PIN	FROM	TO
MBLANK	1	1-02-06	12-A-11
	3		
MIEDGE *	5	1-02-26	
MEDITA *	7	1-02-48	
MITITLE *	9	1-02-24	
MSTCURSA *	11	1-2-50	
MREDOA *	13	1-02-12	
MREDIA *	15	1-02-14	
MGREENOA *	17	1-02-16	
MGREENIA *	19	1-02-18	
	21		
	23		
M2EDGE *	25	1-02-44	
MEDITB *	27	1-02-52	
M2TITLE *	29	1-02-42	
MSTCURSB *	31	1-02-54	
MREDOB *	33	1-02-30	
MREDIB *	35	1-02-32	
MGREENOB *	37	1-02-34	
MGREENIB *	39	1-02-36	
	41		
	43		
	45		
	47		
	49		
	51		
	53		
	55		
	57		
	59		
	61		
	63		
	65		
	67		
	69		
	71		
	73		
	75		
	77		
	79		

— J11 —

SIGNAL	PIN	FROM	TO	
0V	2	◇	0V BUS	(22GA)
0V	4	◇	↑	
0V	6	◇	↑	
0V	8	◇	↑	
0V	10	◇	0V BUS	(22GA)
RDCAMPLIM	12	1-02-57		
	14			
	16			
BLUE1AM *	18	1-02-21	12-A-34	
BLUE0AM *	20	1-02-19	12-A-30	
0V	22	◇	0V BUS	(22GA)
0V	24	◇	↑	
0V	26	◇	↑	
0V	28	◇	↑	
0V	30	◇	0V BUS	(22GA)
RDCAMPL2M	32	1-02-59		
	34			
	36			
BLUE1BM *	38	1-02-39		
BLUE0BM *	40	1-02-37		
	42			
	44			
	46			
	48			
	50			
	52			
	54			
	56			
	58			
	60			
	62			
	64			
	66			
	68			
	70			
	72			
	74			
	76			
	78			
	80			

SIGNAL	PIN	FROM	TO
BLANKM	1	1-02-05	
COSYN *	3	2-02-37	
IEDGEM *	5	1-02-25	12-A-26
EDITAM *	7	1-02-47	
ITITLEM *	9	1-02-23	
STCURSAM *	11	1-02-49	
REDOAM *	13	1-02-11	12-A-36
REDIAM *	15	1-02-13	12-A-31
GREENOAM *	17	1-02-15	12-A-38
GREENIAM *	19	1-02-17	12-A-33
	21		
	23		
ZEDGEM *	25	1-02-43	
EDITBM *	27	1-02-51	
2TITLEM *	29	1-02-41	
STCURSBM *	31	1-02-53	
REDOBM *	33	1-02-29	
REDIBM *	35	1-02-31	
GREENOBM *	37	1-02-33	
GREENIBM *	39	1-02-35	
	41		
	43		
	45		
	47		
	49		
	51		
	53		
	55		
	57		
	59		
	61		
	63		
	65		
	67		
	69		
	71		
	73		
	75		
	77		
	79		

ECL

SIGNAL	PIN	FROM	TO
	2		
J37MHZ	4	5-2-67	
B37MHZ	6	6-2-67	
C37MHZ	8	5-2-14	
D37MHZ	10	6-2-14	
	12		
	14		
	16		
	18		
	20		
	22		
	24		
	26		
	28		
	30		
	32		
	34		
	36		
	38		
	40		
	42		
	44		
	46		
	48		
	50		
	52		
	54		
	56		
	58		
	60		
	62		
	64		
	66		
	68		
	70		
	72		
	74		
	76		
	78		
	80		

TWISTED PAIRS

SIGNAL	PIN	FROM	TO
	1		
CLKAL	3	5-2-62	
A37MHZ *	5	5-2-68	
B37MHZ *	7	6-2-68	
C37MHZ *	9	5-2-13	
D37MHZ *	11	6-2-13	
	13		
	15		
	17		
	19		
	21		
	23		
	25		
	27		
	29		
	31		
	33		
	35		
	37		
	39		
	41		
	43		
	45		
	47		
	49		
	51		
	53		
	55		
	57		
	59		
	61		
	63		
	65		
	67		
	69		
	71		
	73		
	75		
	77		
	79		

CHYRON TELESYSTEMS

TITLE: BACKPLANE - RGN 2

C 2A0 04253 REV

SHEET 3 OF 4

J12-1

SIGNAL	PIN	FROM	TO	
DIGDTA6	2	J1-01-29		
DIGDTA5	4	J1-01-27		
DIGDTA4	6	J1-01-25		
DIGDTA3	8	J1-01-21		
DIGDTA2	10	J1-01-19		
DIGDTA1	12	J1-01 15		
DIGDTAØ	14	J1-01-13		
ENCVID2	16	J1-01-44		
ENCVIDØ	18	J1-01-41		
ENCVID3	20	J1-01 46		
ENCVID1	22	J1-01-42		
DIGIDOW	24	J1-01-45		
IEDGEM *	26	J11-5		
ØV	28	J4-2-80	J2-A-32	
BLUEØAM *	30	J11-20		
ØV	32	J12-A-28	J2-A-35	
BLUE1AM *	34	J11-18		
REDØAM *	36	J11-13		
GREENØAM *	38	J11-17		
ØV	40	J12-A-39		

SIGNAL	PIN	FROM	TO	
DIGDTA7	1	J1-01-31		
CHYDRDY	3	J1-01-30		
DIGIAK *	5	J1-01-32		
DIGIDRDY	7	J1-01-37		
CHYACK *	9	J1-01-35		
MBLANK	11	J10-01		
	13			
	15			
	17			
	19			
	21			
	23			
	25			
	27			
	29			
REDIAM *	31	J11-15		
GREENIAM *	33	J11-19		
ØV	35	J12-A-32	J12-A-37	
ØV	37	J12-A-35	J12-A-39	
ØV	39	J12-A-37	J12-A-40	

SIGNAL	PIN	FROM	TO
	2		
	4		
	6		
	8		
	10		
	12		
	14		
	16		
	18		
	20		
	22		
	24		
	26		
	28		
	30		
	32		
	34		
	36		
	38		
	40		
	42		
	44		
	46		
	48		
	50		
	52		
	54		
	56		
	58		
	60		
	62		
	64		
	66		
	68		
	70		
	72		
	74		
	76		
	78		
	80		

SIGNAL	PIN	FROM	TO
	1		
	3		
	5		
	7		
	9		
	11		
	13		
	15		
	17		
	19		
	21		
	23		
	25		
	27		
	29		
	31		
	33		
	35		
	37		
	39		
	41		
	43		
	45		
	47		
	49		
	51		
	53		
	55		
	57		
	59		
	61		
	63		
	65		
	67		
	69		
	71		
	73		
	75		
	77		
	79		

SIGNAL	PIN	FROM	TO
	2		
	4		
	6		
	8		
	10		
	12		
	14		
	16		
	18		
	20		
	22		
	24		
	26		
	28		
	30		
	32		
	34		
	36		
	38		
	40		
	42		
	44		
	46		
	48		
	50		
	52		
	54		
	56		
	58		
	60		
	62		
	64		
	66		
	68		
	70		
	72		
	74		
	76		
	78		
	80		

SIGNAL	PIN	FROM	TO
	1		
	3		
	5		
	7		
	9		
	11		
	13		
	15		
	17		
	19		
	21		
	23		
	25		
	27		
	29		
	31		
	33		
	35		
	37		
	39		
	41		
	43		
	45		
	47		
	49		
	51		
	53		
	55		
	57		
	59		
	61		
	63		
	65		
	67		
	69		
	71		
	73		
	75		
	77		
	79		

SIGNAL	PIN	FROM	TO
	2		
	4		
	6		
	8		
	10		
	12		
	14		
	16		
	18		
	20		
	22		
	24		
	26		
	28		
	30		
	32		
	34		
	36		
	38		
	40		
	42		
	44		
	46		
	48		
	50		
	52		
	54		
	56		
	58		
	60		
	62		
	64		
	66		
	68		
	70		
	72		
	74		
	76		
	78		
	80		

SIGNAL	PIN	FROM	TO
	1		
	3		
	5		
	7		
	9		
	11		
	13		
	15		
	17		
	19		
	21		
	23		
	25		
	27		
	29		
	31		
	33		
	35		
	37		
	39		
	41		
	43		
	45		
	47		
	49		
	51		
	53		
	55		
	57		
	59		
	61		
	63		
	65		
	67		
	69		
	71		
	73		
	75		
	77		
	79		

SIGNAL	PIN	FROM	TO
	2		
	4		
	6		
	8		
	10		
	12		
	14		
	16		
	18		
	20		
	22		
	24		
	26		
	28		
	30		
	32		
	34		
	36		
	38		
	40		
	42		
	44		
	46		
	48		
	50		
	52		
	54		
	56		
	58		
	60		
	62		
	64		
	66		
	68		
	70		
	72		
	74		
	76		
	78		
	80		

SIGNAL	PIN	FROM	TO
	1		
	3		
	5		
	7		
	9		
	11		
	13		
	15		
	17		
	19		
	21		
	23		
	25		
	27		
	29		
	31		
	33		
	35		
	37		
	39		
	41		
	43		
	45		
	47		
	49		
	51		
	53		
	55		
	57		
	59		
	61		
	63		
	65		
	67		
	69		
	71		
	73		
	75		
	77		
	79		

INCN CHANGE NO.	DWN	CHKD	APP'D	MO DAY YR
CN-2110	D.W.			4-14-83

CHYRON TELESYSTEMS
265 Spagnoli Road
Melville, New York

TITLE
BACKPLANE - RGU-2

C 2A0 0423 REV

4 of 4

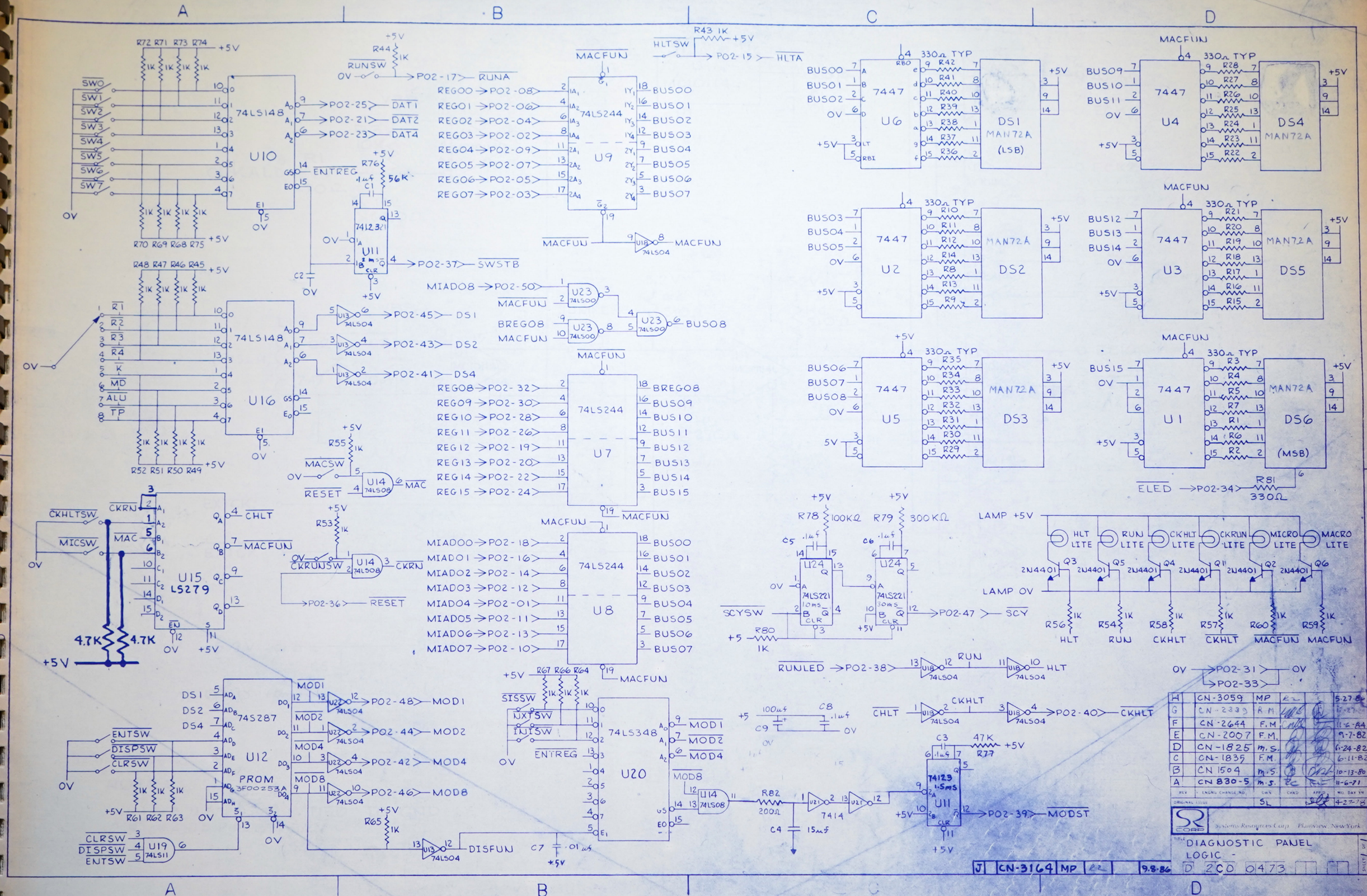

H	CN-3059	MP	R2		5-27-84
G	CN-2339	R.M.			12-27-[illegible]
F	CN-2644	F.M.			11-6-84
E	CN-2007	F.M.			9-7-82
D	CN-1825	M.S.			6-24-82
C	CN-1835	F.M.			6-11-82
B	CN 1504	M.S.			10-13-80
A	CN 830-5	M.S.			11-6-71
REV	ENGRG CHANGE NO.	DWN	CHKD	APPD	MO DAY YR
ORIGINAL ISSUE		SL			4-27-78

Systems Resources Corp. Plainview, New York

TITLE DIAGNOSTIC PANEL LOGIC -

D 2C0 0473

SHEET 1 OF 1

J	CN-3164	MP	R2		9.8.86

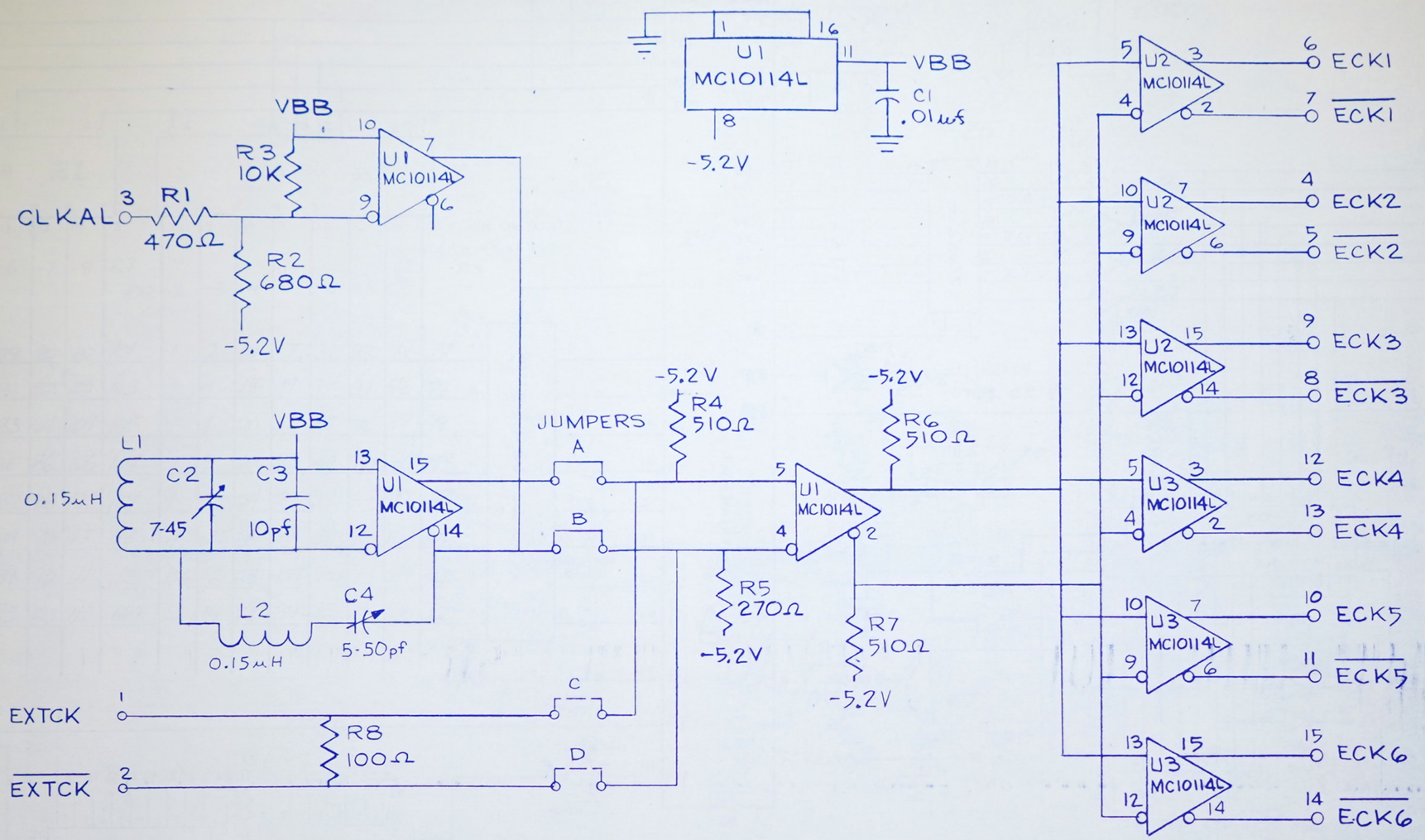

NOTE:

U1, U2, U3 PINS 1 & 16 TIED TO GND
U1, U2, U3 PINS 8 TO -5.2V

TITLE	DWG. NO.	REVISION						
ASSEMBLY	6A01-0229	D	E	G	J	K	L	
LOGICS	6A00478	A	B	C	D	E	F	
DETAIL	4A00412	B	B	C	C	C	D	
ARTWORK	3A00064	A	A	A	A	A	B	
SCREEN	3A00063	A	A	A	B	B	C	

REV.	ENGRG CHANGE NO.	DWN.	CHKD.	APP'D.	MO. DAY YR.
F	CN-2440	F.M.			1-13-83
E	CN-2423	F.M.			12-16-83
D	CN-2371	D.W.			11-4-83
C	CN 2201	M.S.			3-23-83
B	CN 1887	M.S.			5-18-82
A	CN 371	AL			2-12-82
ORIGINAL ISSUE		M.S.			5-11-78

CHYRON TELESYSTEMS
265 Spagnoli Road
Melville, New York 11747

TITLE LOGICS ECL OSCILLATOR BOARD

C 2C0 0478

SHEET 1 of 1

1 ON -051 ASSY ONLY INSTALL @ Z4
20-8035-000, Z21, Z22, Z23, R9, R10, R11

4.608MHZ 48-300-07
C1 C2 20pf (2 PLCS) 28-200-4
XTAL1 XTAL2
P20 P21
PU R40 3.3K +5
LS74 Z8
3.3K R1
E1 E2
Z5 LS04 LS374
Z6 Z7 LS14
J1 (COMP. SIDE)
DB0 DB1 DB2 DB3 DB4 DB5 DB6 DB7
B0 B1 B2 B3 B4 B5 B6 B7
WR P25 P26
Z18 06 82Ω R2 57152, CR14
LS14 Z7 22-75116-001
STB
ALE Z8 LS74
Z9 22-51013-000
Z11 Z10 Z12 22-08574-157
K1 K2 RA303 22051
48->80-0
22-102-4 .001μF C3 220 R3
C4 2.2μF 37-225-16
R6 4.7K CR19 C5 4.7μF 37-475-35
C D E F H J K L
CT CT NT NT CR CR NR NR
Z1 LS138 Z2 LS138
RX1 RX2 R7 R8 3.3K (16 PLCS)
Z4 22-C0908-003 20-08046-045
PROG PI0 PI1 PI2 PI3 PI4 PI5 PI6 PI7 PSEN ALE RSET
R4 806Ω R5 6.8K R6 4.7K
LS14 Z7 ALE
15K, R9 R10 3.3K R11 15K R12 330
Z21 22-7641-169 Z22 22-7641-168 Z23 74LS374
Z24 Z25 Z26 Z27 Z28 Z29 Z30 Z31
48-262-0 22-7447-3 R18 R19 R25 R26 R32 R33 R39 336
Z16 Z17 LS273
LEDSTB H1 H2 H3 H4
Z13 Z14 Z15 93LS34
RX3 3.3K (3 PLCS) RX4-2 4.7K
RX5 RX6 RX7 82
CR17 (17 PLCS) CR18 CR6 CR1 CR9 CR10
KEY
EN1 EN2 EN3
A1 A2 A3 A4
+5VDC GND
C26 .033μF 32-333-4 (12 PLCS) C6,7,8,9,10,11,12,13,22,23,24,25
10μF 37-106-15
30 PIN 0.1 CTR EDGE CONN

LAST DES. USED				DES. NOT USED			
C26	R40	K2	Y1	C15	C21	C14	
Z31	CR19	RX7	J1				
E2							

REV.	ENGRG CHANGE NO.	DWN.	CHKD.	APP'D.	MO. DAY YR.
A	CN-2585	F.M.	MES		8-23-84
Ø					11-14-79

CHYRON TELESYSTEMS 265 Bethpage-Spagnoli Road Melville, New York 11747

TITLE A/N KEYBOARD LOGICS (KEYTRONICS) (CHIV, RGL)

C 2C0 0581 SHEET OF

NOTES:
1. ADJUST R,G,B TO 714 mV WITH RDCAMPL LOW.
2. ADJUST REDUCED AMPL. POT FOR R,G,B OF 535 mV (75IRE) WITH RDCAMPL HIGH.
3. FOR USE WITH COLORIZERS 5750 PLACE JUMPER IN POSITION "NC".
4. RC = REDUCED COLOR AMPLITUDE
F.C = FULL COLOR AMPLITUDE.

TITLED → PI-10 — +12, 2.2K, IN914, +5 — 7406 U1 (11, 10) — T1
EDIT → PI-08 — +12, 2.2K, IN914, +5 — 7406 U1 (1, 2) — T2
STCURS → PI-12 — +5, 1K — 7406 U1 (13, 12) — C
EDGE → PI-06 — +12, 2.2K, IN914, +5 — 7406 U1 (3, 4) — E
SYNC — JUMPER A — 7406 U1 (5, 6) — S
BLANK — JUMPER B — 7406 U1 (9, 8) — BL
+12, 1.2K, IN914, +5, 500Ω — EDIT, EDGE AND TITLE SYNC LEVEL
+12, 3.3K, 500Ω — TITLE CHANNEL SET UP LEVEL

RED1 → PI-16 — V+, 1K — 7406 U2 (11, 10) — R1
RED0 → PI-14 — V+, 1K — 7406 U2 (9, 8) — R0
GRN1 → PI-20 — V+, 1K — 7406 U2 (5, 6) — G1
GRN0 → PI-18 — V+, 1K — 7406 U2 (13, 12) — G0
BLU1 → PI-17 — V+, 1K — 7406 U2 (1, 2) — B1
BLU0 → PI-19 — V+, 1K — 7406 U2 (3, 4) — B0

DC LEVEL: +12, 330Ω, 1K, 1K, +12
T1 — 1.8K
BL — 2.7K
2.2K
S
C
NC
SEE NOTE 3
4.7K, 18μH, 33μH, 2.7μH, 120pf, 330Ω, 1.5K, 220pf
+12, .1μf, LF357N, U4 (3, 7, 2, 6, 4), .1μf, -12
390Ω, 75Ω 1%, TITLE OUT
1K, 100pf, 2.7K, -12
330Ω, 1K GAIN
OUTPUT CIRCUIT 1 (TYPICAL)

T2 — 1.8K
C — 2.7K
S — 5K
OUTPUT CIRCUIT 2 — U5 — 75Ω 1% — EDIT OUT

E — 1.8K
S — 2.7K, 2.2K
OUTPUT CIRCUIT 3 — U6 — 75Ω 1% — EDGE OUT

R1 — 1.5K
R0 — 3.9K
OUTPUT CIRCUIT 4 — U7 — 75Ω 1% — RED OUT

G1 — 1.5K
G0 — 3.9K
OUTPUT CIRCUIT 5 — U8 — 75Ω 1% — GRN OUT

B1 — 1.5K
B0 — 3.9K
OUTPUT CIRCUIT 6 — U9 — 75Ω 1% — BLU OUT

RED1 — 7407 U1 (11, 10) — 1K, 1.5K
RED0 — 7407 U1 (9, 8) — 1K, 3.9K, 330Ω
GRN1 — 7407 U1 (5, 6) — 1K, 1.5K
GRN0 — 7407 U1 (13, 12) — 1K, 3.9K, 330Ω
BLU1 — 7407 U1 (1, 2) — 1K, 1.5K
BLU0 — 7407 U1 (3, 4) — 1K, 3.9K, 330Ω
V+

SYNC/COMP VIDEO IN — 15K, 1μf, 15K, 15K, 100K, 1μf, +12, +5, .01μf, -12, U3 LF375N (2, 3, 7, 4, 6), 100Ω, .1μf
+5, 1K, 39K, Q1 2N3904, COSYN, PI-04, 3.3K, 100μf/20V
+5, 1K, SYNC, Q2 2N3904

RDCAMPL → PO1-11
REDUCED COLOR (RC)
FULL COLOR (FC)
74S04 U1 (1, 2) — 10Ω
74S04 U1 (3, 4) — 10Ω
REDUCE AMPLITUDE 10Ω
+12, 160Ω 1/2W, V+
IN5225B
IN5231B
+5, 1K, 1.5K

BLANKING IN — 15K, 1μf, +5, 15K, +12, Q3 2N3904, 2N3906, Q4, .1μf, 2.7K, 39K, 470Ω, -12
MOTOROLA OR T.I ONLY
BLANK, .01μf, +5, 3.3K, 100μf/20V
+5, 1K, Q5 2N3904, PO1-02 → BLANK

0V → PI-09, PI-07, PI-05, PI-03, PI-01

-12 → P2-1 — -12
+12 → P2-2 — +12, 100μf, 1μf
+5 → P2-3 — +5, 100μf, 1μf
GND → P2-4

L		CN-3059	MP			5-27-86
K		CN-2826	RLC			3-4-85
J		CN-2712	M.S.		TT	12-3-84
H		CN-2556	G.A.			12-3-84
G		CN-2273	D.W.			8-12-83
F		CN-2206	M.S.			4-8-83
E		CN-1985	F.M.			8-17-82
D		CN-1585	F.M.			7-19-82
C		CN1871	ALS			3-22-82
B		CN1554	F.M.		TT	1-20-81
A		CN1514	M.S.			11-22-80
REV.		ENGRG CHANGE NO.	DWN.	CHKD.	APP'D.	MO DAY YR.
ORIGINAL ISSUE		CN 1373	M.S.			6-2-80

CHYRON TELESYSTEMS
265 Bethpage-Spagnoli Road
Melville, New York 11747

TITLE: SCHEMATIC, VIDEO BOARD (CHIV, RGU-I & 2)
C 2C0 0617 REV

SHEET 1 OF 1

TITLE	DWG. NO.	REVISION
ASSY		
ASSY		
ASSY	6A00392	N P R S T T U V W
ASSY	6A10392	N P R S T T U V W
LOGIC	2C00617	C D E F G H J K L
DETAIL	4A00703	D D D D D D D D D
ARTWK.	3A00086	C C C C C C C C C
SCREEN		

RT, 50W REGULATED OUTPUT MODULE
15 VOLTS

REF. DESIGNATOR	DESCRIPTION	ACDC P/N	MANUFACTURER	MANUFACTURER P/N
IC-1	INTEGRATED CIRCUIT, DUAL OP AMP	62-331-017	RCA	CA358AG
IC-2	INTEGRATED CIRCUIT, REGULATOR	66-780-000	ACDC	66-780-000
IC-3	INTEGRATED CIRCUIT, OVP	67-379-001	MOTOROLA	MC3423 U/P1
Q1	TRANSISTOR	61-687-006	MOTOROLA	2N6054
SCR1	RECTIFIER, CONTROLLED	52-714-047	RCA	2N6394
CR1, 6, 7, 8, 9	DIODE	50-464-045	GENERAL ELECTRIC	IN4454
CR2, 3	DIODE	50-464-099	MOTOROLA	IN3891
CR10	DIODE	50-464-003	MOTOROLA	IN4004
C5, 6	CAPACITOR, 1 µf, 50V, TANTALUM	54-716-010	SPRAGUE	162D105X9050CD2
C7, 11	CAPACITOR, 0.1 µf, 100V, CERAMIC	52-231-104	RMC	TA-010
C8, 9	CAPACITOR, 0.0047 µf, 100V, CERAMIC	67-159-472	ERIE	8141-100-X7R0-472K
C10	CAPACITOR, 0.01 µf, 100V, CERAMIC	67-159-103	KEMET	C330C103K2R
C12, 13	CAPACITOR, 0.1 µf, 500V, CERAMIC	52-231-001	SPRAGUE	5HK-P10
C14	CAPACITOR, 1 µf, 50V, CERAMIC	56-137-002	KEMET	C330C105K5U1CA
C15	CAPACITOR, 250 µf, 20V, AL ELECTROLYTIC	62-708-006	CDE	PC250-25
C16	CAPACITOR, 0.0047 µf, 100V, CERAMIC	67-159-472	ERIE	8141-100-X7R0-472K
R5	RESISTOR, 64.9K, 1%, 1/10W, MF	57-757-479	MIL-R-10509	RN55C6492F
R6	RESISTOR, 301K, 1%, 1/10W, MF	68-586-547	MIL-R-10509	RN55D3013F
R9	RESISTOR, 3.65K, 1%, 1/10W, MF	57-757-355	MIL-R-10509	RN55C3651F
R12	RESISTOR, 1.0K, 5%, 1/4W, CC	55-675-102	MIL-R-11	RC07GF102J
R13	RESISTOR, 220 Ω, 5%, 1/4W, CC	55-675-221	MIL-R-11	RC07GF221J
R22	RESISTOR, 20K, 5%, 1/4W, CC	55-675-203	MIL-R-11	RC07GF203J
R14, 23	RESISTOR, 10K, 5%, 1/4W, CC	55-675-103	MIL-R-11	RC07GF103J
R24	RESISTOR, 100 Ω, 5%, 1/4W, CC	55-675-101	MIL-R-11	RC07GF101J
R25	RESISTOR, 15K, 5%, 1/4W, CC	55-675-153	MIL-R-11	RC07GF153J
R17	POTENTIOMETER, 1.0K	61-291-102	BOURNS	3389W-1-102
R20	POTENTIOMETER, 1.0K	63-724-102	BOURNS	3359W-1-102
CR4	DIODE	"OMIT"		
CR5	DIODE	51-739-113	MOTOROLA	IN4748A
C1, 2	CAPACITOR, 0.005 µf, 500V, CERAMIC	52-231-502	RMC	SM-250
C4	CAPACITOR, 680 µf, 40V, AL ELECTROLYTIC	63-284-009	SPRAGUE	673D687H040JE2C
R4	RESISTOR, 681 Ω, 1%, 1/10W, MF	57-757-281	MIL-R-10509	RN55C6810F
R11	RESISTOR, 80.6K, 1%, 1/10W, MF	57-757-488	MIL-R-10509	RN55C8062F
R16	RESISTOR, 3.16K, 1%, 1/10W, MF	57-757-349	MIL-R-10509	RN55C3161F
R18	RESISTOR, 2.94K, 1%, 1/10W, MF	57-757-346	MIL-R-10509	RN55C2941F
R19	RESISTOR, 13.0K, 1%, 1/10W, MF	57-757-412	MIL-R-10509	RN55C1302F
R21	RESISTOR, 2.00K, 1%, 1/10W, MF	57-757-330	MIL-R-10509	RN55C2001F
R10	RESISTOR	"OMIT"		
R3	RESISTOR, 300 Ω, 5%, 1W, CC	50-460-301	MIL-R-11	RC32GF301
R15	RESISTOR, 1.0K, 5%, 1/2W, CC	50-461-102	MIL-R-11	RC20GF102
R1, 2	RESISTOR, 68 Ω, 5%, 1W, CC	50-460-680	MIL-R-11	RC32GF680
R7, 8	WIRE, RESISTANCE, 19GA	68-348-001	ACDC	68-348-001
F1	FUSE, 8A	68-301-005	LITTLEFUSE	318008
L1	INDUCTOR, 210 µhy	98767	ACDC	98767
T1	TRANSFORMER	52087	ACDC	52087

RT, 50W REGULATED OUTPUT MODULE
12 VOLTS

REF. DESIGNATOR	DESCRIPTION	ACDC P/N	MANUFACTURER	MANUFACTURER P/N
IC-1	INTEGRATED CIRCUIT, DUAL OP AMP	62-331-017	RCA	CA358AG
IC-2	INTEGRATED CIRCUIT, REGULATOR	66-780-000	ACDC	66-780-000
IC-3	INTEGRATED CIRCUIT, OVP	67-379-001	MOTOROLA	MC3423 U/P1
Q1	TRANSISTOR	61-687-006	MOTOROLA	2N6054
SCR1	RECTIFIER, CONTROLLED	52-714-047	RCA	2N6394
CR1, 6, 7, 8, 9	DIODE	50-464-045	GENERAL ELECTRIC	IN4454
CR2, 3	DIODE	50-464-099	MOTOROLA	IN3891
CR10	DIODE	50-464-003	MOTOROLA	IN4004
C5, 6	CAPACITOR, 1 µf, 50V, TANTALUM	54-716-010	SPRAGUE	162D105X9050CD2
C7, 11	CAPACITOR, 0.1 µf, 100V, CERAMIC	52-231-104	RMC	TA-010
C8, 9	CAPACITOR, 0.0047 µf, 100V, CERAMIC	67-159-472	ERIE	8141-100-X7R0-472K
C10	CAPACITOR, 0.01 µf, 100V, CERAMIC	67-159-103	KEMET	C330C103K2R
C12, 13	CAPACITOR, 0.1 µf, 500V, CERAMIC	52-231-001	SPRAGUE	5HK-P10
C14	CAPACITOR, 1 µf, 50V, CERAMIC	56-137-002	KEMET	C330C105K5U1CA
C15	CAPACITOR, 250 µf, 20V, AL ELECTROLYTIC	62-708-006	CDE	PC250-25
C16	CAPACITOR, 0.0047 µf, 100V, CERAMIC	67-159-472	ERIE	8141-100-X7R0-472K
R5	RESISTOR, 64.9K, 1%, 1/10W, MF	57-757-479	MIL-R-10509	RN55C6492F
R6	RESISTOR, 301K, 1%, 1/10W, MF	68-586-547	MIL-R-10509	RN55D3013F
R9	RESISTOR, 3.65K, 1%, 1/10W, MF	57-757-355	MIL-R-10509	RN55C3651F
R12	RESISTOR, 1.0K, 5%, 1/4W, CC	55-675-102	MIL-R-11	RC07GF102J
R13	RESISTOR, 220 Ω, 5%, 1/4W, CC	55-675-221	MIL-R-11	RC07GF221J
R22	RESISTOR, 20K, 5%, 1/4W, CC	55-675-203	MIL-R-11	RC07GF203J
R14, 23	RESISTOR, 10K, 5%, 1/4W, CC	55-675-103	MIL-R-11	RC07GF103J
R24	RESISTOR, 100 Ω, 5%, 1/4W, CC	55-675-101	MIL-R-11	RC07GF101J
R25	RESISTOR, 15K, 5%, 1/4W, CC	55-675-153	MIL-R-11	RC07GF153J
R17	POTENTIOMETER, 1.0K	61-291-102	BOURNS	3389W-1-102
R20	POTENTIOMETER, 1.0K	63-724-102	BOURNS	3359W-1-102
CR4	DIODE	"OMIT"		
CR5	DIODE	51-739-105	MOTOROLA	IN4747A
C1, 2	CAPACITOR, 0.0047 µf, 500V, CERAMIC	52-231-472	RMC	SM-250
C4	CAPACITOR, 680 µf, 40V, AL ELECTROLYTIC	63-284-009	SPRAGUE	673D687H040JE2C
R4	RESISTOR, 806 Ω, 1%, 1/10W, MF	57-757-288	MIL-R-10509	RN55C6810F
R11	RESISTOR, 48.7K, 1%, 1/10W, MF	57-757-467	MIL-R-10509	RN55C5112F
R16	RESISTOR, 1.78K, 1%, 1/10W, MF	57-757-325	MIL-R-10509	RN55C1781F
R18	RESISTOR, 2.94K, 1%, 1/10W, MF	57-757-346	MIL-R-10509	RN55C2941F
R19	RESISTOR, 9.76K, 1%, 1/10W, MF	57-757-396	MIL-R-10509	RN55C9761F
R21	RESISTOR, 2.00K, 1%, 1/10W, MF	57-757-330	MIL-R-10509	RN55C2001F
R10	RESISTOR	"OMIT"		
R3	RESISTOR, 220 Ω, 5%, 1W, CC	50-460-221	MIL-R-11	RC32GF221
R15	RESISTOR, 1.0K, 5%, 1/2W, CC	50-461-102	MIL-R-11	RC20GF102
R1, 2	RESISTOR, 68 Ω, 5%, 1W, CC	50-460-680	MIL-R-11	RC32GF680
R7, 8	WIRE, RESISTANCE, 19GA	68-348-001	ACDC	68-348-001
F1	FUSE, 8A	68-301-005	LITTLEFUSE	318008
L1	INDUCTOR, 210 µH	98767	ACDC	98767
T1	TRANSFORMER	98765	ACDC	98765

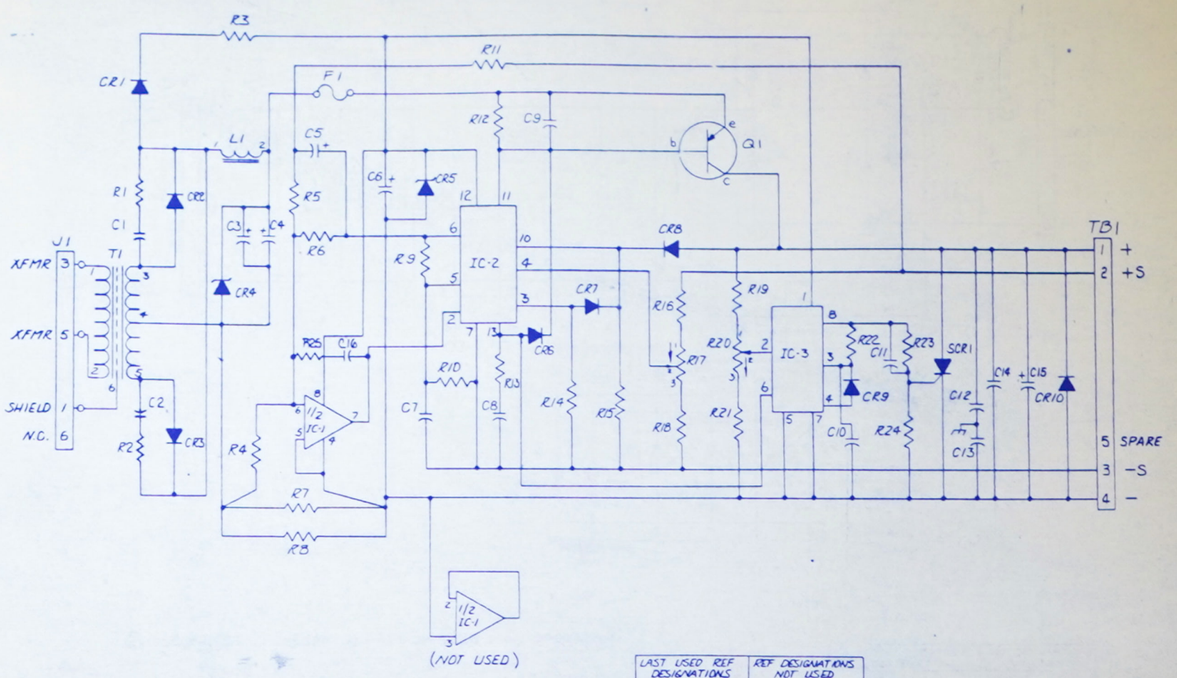

LAST USED REF DESIGNATIONS	REF. DESIGNATIONS NOT USED
CR10 U C16 J1 R25 TB1 IC3 F1 Q1 T1 SCR1	(NONE)

REV.	ENGRG CHANGE NO.	DWN.	CHKD.	APP'D.	MO. DAY YR.
A	CN1871	AL S			3-14-82
ORIGINAL ISSUE	CN1589	FM			2-9-81

CHYRON TELESYSTEMS
265 Bethpage-Spagnoli Road
Melville, New York 11747

TITLE SCHEMATIC POWER SUPPLY
MODEL RT-301-3 OR RT-301-9 RGU-1&2

C 2C0 0690

SHEET 1 OF 4

STAMPAT PRODUCTS INC PORT WASHINGTON N.Y.

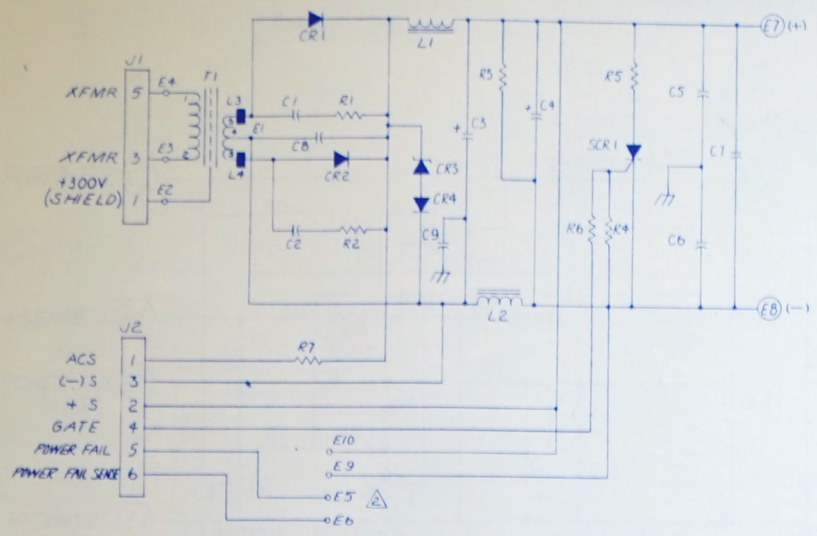

2 TERMINALS E5, E6, E9, E10 FOR POWER FAIL INTERCONNECTIONS.

LAST REFERENCE DESIGNATIONS USED	
CR4	J2
R7	E10
C9	
T1	
SCR1	
L4	

TITLE: SCHEMATIC, OUTPUT, 300 WATT

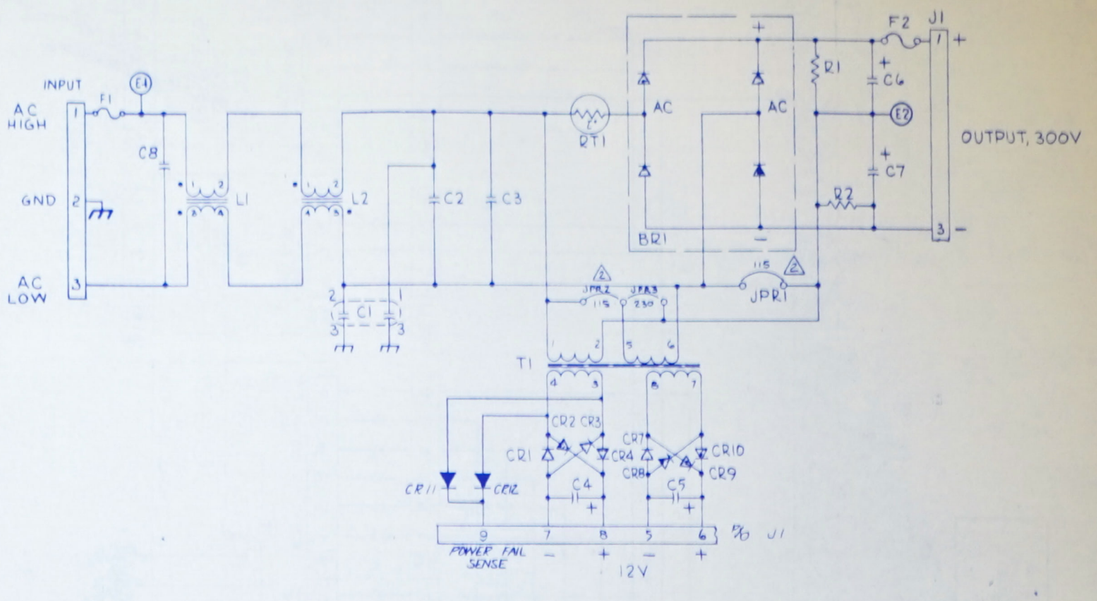

2 DISCONNECT JPR1 & JPR2 AND ADD JPR3 FOR 230 V OPERATION

TITLE: SCHEMATIC, INPUT-300 WATTS, RS & RT 300/B

LAST USED REF DESIGNATION		REF DESIGNATIONS NOT USED
CR	TB1	CR5,6,
CR12	J1	
F2	JPR3	
L2	T1	
R2	E2	
RT1		
BR1		

MODEL RS/RT300, OUTPUT MODULE
CASE SIZE M30/T30
5 VOLTS

REF. DESIGNATOR	DESCRIPTION	ACDC P/N	MANUFACTURER	MANUFACTURER P/N
C1, 2	CAPACITOR, 0.1 µf, 100V, CERAMIC	52-231-104	R.M.C.	TA-010
C3, 4	CAPACITOR, 18,000 µf, 6V, AL ELECTROLYTIC	61-867-004	SPRAGUE	622 "D" SERIES
C5, 6, 9	CAPACITOR, 0.1 µf, 500V, CERAMIC	52-231-001	SPRAGUE	5GA-P10
C7	CAPACITOR, 1.0 µf, 50V, CERAMIC	56-137-002	SPRAGUE	5CZ5U105X0050C5
C8	CAPACITOR, 0.01 µf, 100V, CERAMIC	58-005-103	KEMET	CK05BX103K
CR1, 2	DIODE	68-876-002	ACDC	68-876-002
CR3	TRANSIENT SUPPRESSOR	67-449-002	GENERAL SEMI	P6KE15
CR4	DIODE	50-464-003	MOTOROLA	IN4004
R1, 2	RESISTOR, 3.3 Ω, 5%, 1W, CC	50-460-339	MIL-R-11	RC32GF3R3J
R3	RESISTOR, 6.2 Ω, 10%, 7W, WW	63-341-629	TRW	PW7
R4	RESISTOR	"OMIT"		
R5	RESISTOR	"OMIT"		
R6	RESISTOR	"OMIT"		
R7	RESISTOR, 5.1K, 5%, 1/4W, CC	55-675-512	MIL-R-11	RC07GF512J
SCR1	RECTIFIER, CONTROLLED	"OMIT"		
T1	TRANSFORMER	98706	ACDC	98706
L1	CHOKE, 7 µH	98736	ACDC	98736
L2	CHOKE, 5 µH	98744	ACDC	98744
L3, 4	CORE, FERRITE BEAD	"OMIT"		

CROWBAR OPTION

SCR1	RECTIFIER, CONTROLLED	52-714-047	MOTOROLA	2N6394
R4	RESISTOR, 100 Ω, 5%, 1/4W, CC	55-675-101	MIL-R-11	RC07GF101J
R5	RESISTOR, 0.1 Ω, 5%, 3W, WW	52-633-108	MIL-R-26	RW69V108
R6	RESISTOR, 180 Ω, 5%, 2W, WW	52-064-181	MIL-R-11	BWF 180 Ω

MODEL RS/RT300, INPUT MODULE
CASE SIZE M30/T30

REF. DESIGNATOR	DESCRIPTION	ACDC P/N	MANUFACTURER	MANUFACTURER P/N
C1	CAPACITOR, DUAL, 0.005 µf, 125VAC, CERAMIC	57-936-000	SPRAGUE	29C147
C2, 3	CAPACITOR, 1.0 µf, 600V, FILM	63-900-105	I.M.B.	ZA2G105
C8	CAPACITOR, 0.56 µf, 600V, FILM	63-900-564	I.M.B.	ZA2G564
C4	CAPACITOR, 2200 µf, 25V, AL ELECTROLYTIC	62-708-020	UNITED CHEMICON	25VB2200
C6, 7	CAPACITOR, 1600 µf, 200V, AL ELECTROLYTIC	67-928-003	MALLORY	CGS162T200V3L3PH
CR1–4, 11, 12	DIODE	50-464-003	MOTOROLA	IN4004
CR7–10	DIODE	"OMIT"		
R1, 2	RESISTOR, 56K, 5%, 1W, CC	50-460-563	MIL-R-11	RC326F563J
RT1	THERMISTOR, 2.5 Ω	67-216-001	MIDWEST COMPONENTS	3D9110
F1	FUSE, 10A, 250V	51-533-001	LITTLEFUSE	314101
F2	FUSE, 4A	68-301-004	LITTLEFUSE	318004
T1	TRANSFORMER	52660	ACDC	52660
L1	INDUCTOR	98714	ACDC	98714
L2	INDUCTOR	98708	ACDC	98708
BR1	BRIDGE RECTIFIER	66-718-006	G1	KBPC2506

CHLORON TELESYSTEMS
265 Bethpage-Spagnoli Road
Melville, New York 11747

TITLE: SCHEMATIC POWER SUPPLY
MODEL RT-301-3 OR RT-301-9 RGU-1 & 2

C 2C0-0690 REV. A

SHEET 2 OF 4

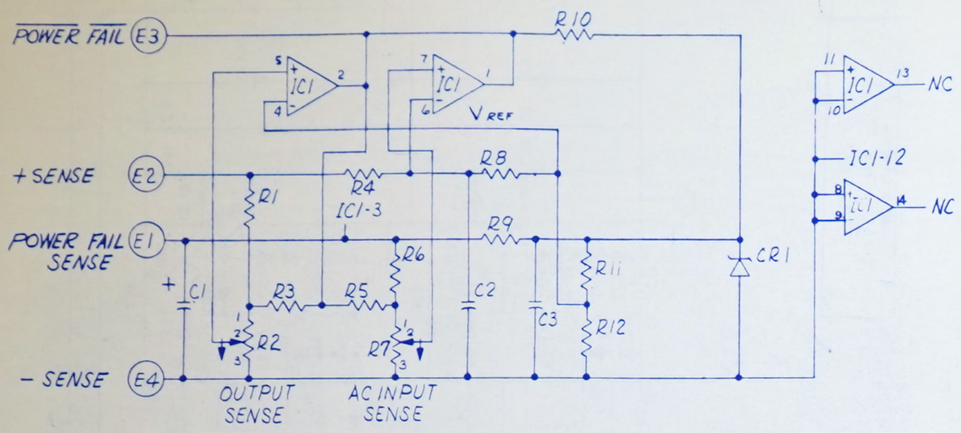

TITLE SCHEMATIC, POWER FAIL MODULE

RS/RT POWER FAIL MODULE
5 VOLTS

REF. DESIGNATOR	DESCRIPTION	ACDC P/N	MANUFACTURER	MANUFACTURER P/N
R1	RESISTOR, 24.3K, 1%, 1/10W, MF	57-757-438	MIL-R-10509	RN55C2432F
R4	RESISTOR, 5.1 MEG, 5%, 1/4W, CC	55-675-515	MIL-R-11	RC07GF515J
R6	RESISTOR, 66.5K, 1%, 1/10W, MF	57-757-480	MIL-R-10509	RN55C6652F
C1	CAPACITOR, 10 µf, 50V, TANTALUM	58-577-008	SPRAGUE	199D106X0050FA2
C2	CAPACITOR, 0.0047 µf, 100V, CERAMIC	67-159-472	VARADYNE	2120 X7R 100R 472KA
C3	CAPACITOR, 0.1 µf, 100V, CERAMIC	67-159-104	VARADYNE	2112 X7R 100R 104K
CR1	DIODE	51-739-023	MOTOROLA	IN751A
IC1	INTEGRATED CIRCUIT, QUAD COMPARATOR	62-331-010	MOTOROLA	MLM339
R2, 7	POTENTIOMETER, 1K	68-715-102	BOURNS	3386P
R3	RESISTOR, 300K, 1%, 1/4W, CC	55-675-304	MIL-R-11	RC07GF304J
R5	RESISTOR, 130K, 1%, 1/4W, CC	55-675-134	MIL-R-11	RC07GF134J
R8	RESISTOR, 29.4K, 1%, 1/10W, MF	57-757-446	MIL-R-10509	RN55C2942F
R9	RESISTOR, 3.9K, 5%, 1/4W, CC	55-675-392	MIL-R-11	RC07GF392J
R10	RESISTOR, 10K, 5%, 1/4W, CC	55-675-103	MIL-R-11	RC07GF103J
R11	RESISTOR, 49.9K, 1%, 1/10W, MF	57-757-468	MIL-R-10509	RN55C4992F
R12	RESISTOR, 1.00K, 1%, 1/10W, MF	57-757-301	MIL-R-10509	RN55C1000F

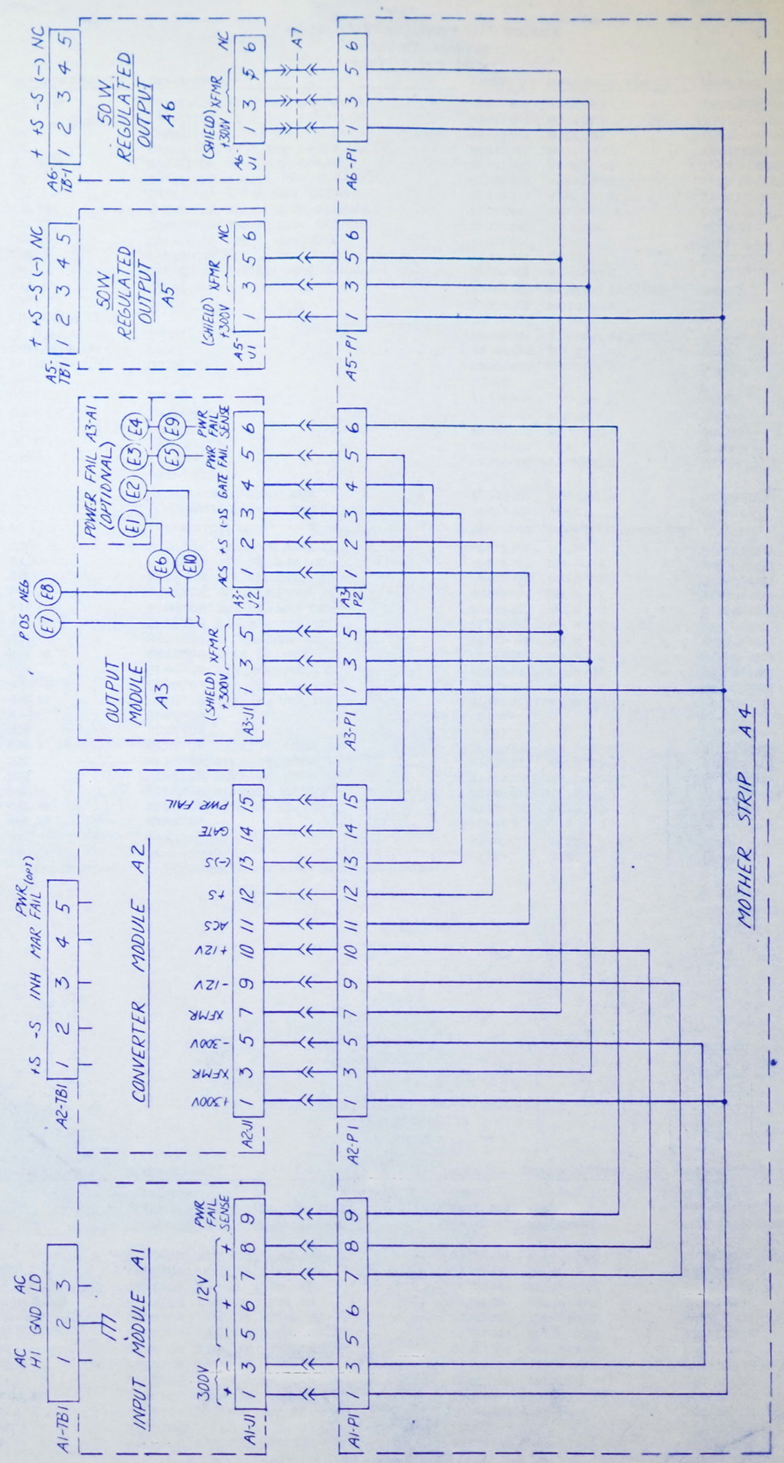

TITLE INTERCONNECT DIAGRAM, POWER SUPPLY-300 WATT TRIPLE RT-301-3 OR RT-301-9

CHYRON TELESYSTEMS
265 Bethpage-Spagnoli Road
Melville, New York 11747

TITLE SCHEMATIC POWER SUPPLY
MODEL RT-301-3 OR RT-301-9 RGU-1&2
C 200 0690 REV. A
SHEET 3 OF 4

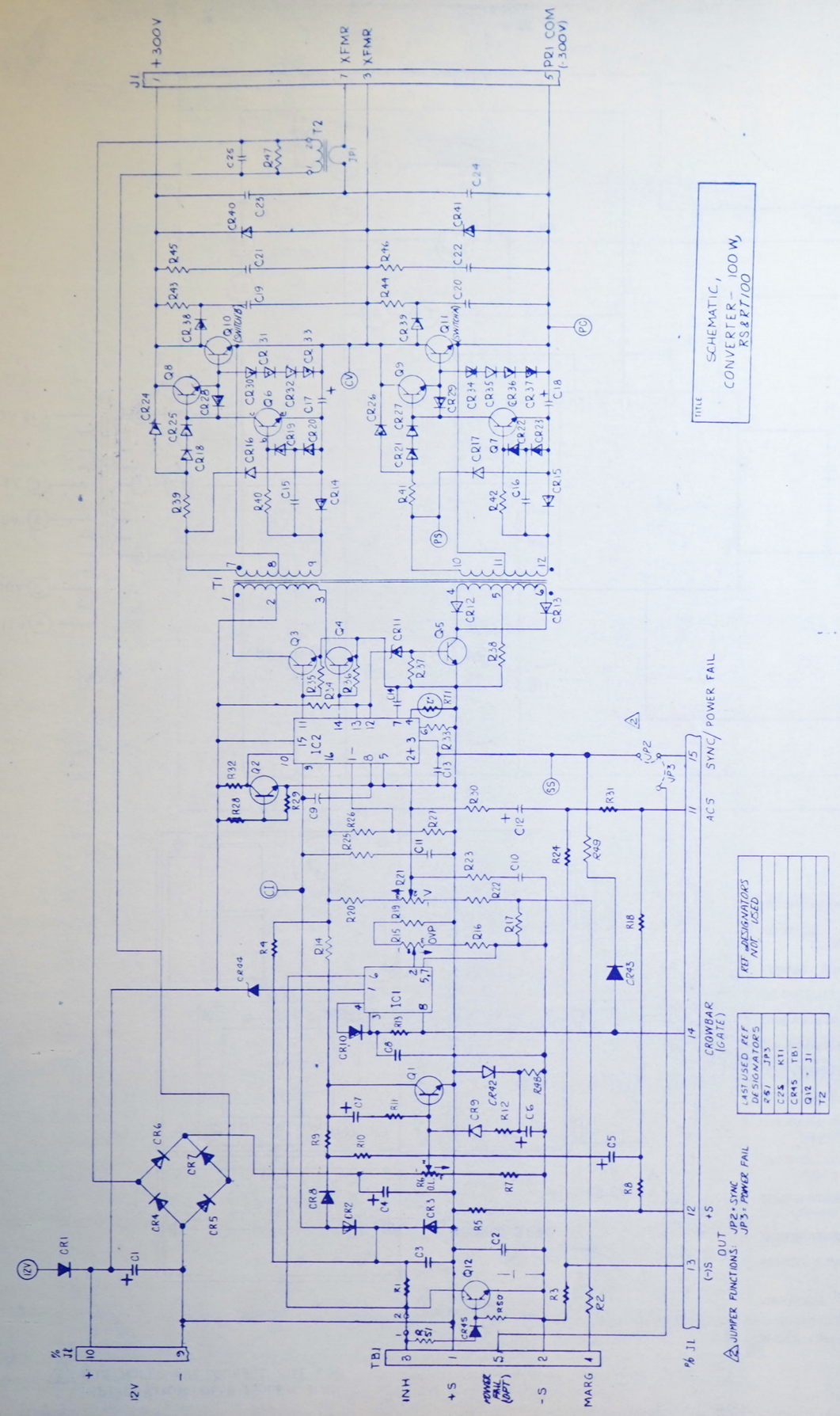

MODEL RS/RT300, CONVERTER MODULE
CASE SIZE M30/T30
PARTIAL ASSEMBLY*

REF. DESIGNATOR	DESCRIPTION	ACDC P/N	MANUFACTURER	MANUFACTURER P/N
C1, 17, 18	CAPACITOR, 22 µf, 35V, TANTALUM	58-577-016	MALLORY	TDC226M035WSG
C6	CAPACITOR, 1.0 µf, 50V, TANTALUM	58-577-015	MALLORY	TDC105M050NSE
C4	CAPACITOR, 0.22 µf, 50V, TANTALUM	58-577-011	MALLORY	TDC224M050NSE
C3	CAPACITOR, 4.7 µf, 35V, TANTALUM	58-577-002	MALLORY	TDC475M035WSF
C2, 15, 16	CAPACITOR, 0.1 µf, 50V, CERAMIC	56-137-005	VARADYNE	2120Z5U050R104M
C8	CAPACITOR, 0.001 µf, 100V, CERAMIC	67-159-102	VARADYNE	2115X7R100R102K
C13	CAPACITOR, 470 pf, 100V, CERAMIC	67-159-471	VARADYNE	2115X7R100R471K
C19, 20	CAPACITOR, 820 pf, 1000V, CERAMIC	52-231-821	CENTRALAB	DD821
C21, 22	CAPACITOR, 2200 pf, 500V, CERAMIC	52-231-202	SPRAGUE	10SS-D22
C23, 24	CAPACITOR, 0.68 µf, 400V, FILM	63-847-684	BISHOP	D1091-104
C14	CAPACITOR, 0.004 µf, 80V, FILM	54-435-472	SPRAGUE	192P4729R8
C9	CAPACITOR, 0.0015 µf, 100V, CERAMIC	67-159-152	VARADYNE	2115X7R100R152K
CR2, 8	DIODE	50-464-102	HEWLETT PACKARD	IN6263
CR11	DIODE	51-739-005	MOTOROLA	IN753A
CR4, 7, 9, 10, 12–23, 25, 27, 42, 43	DIODE	50-464-045	GENERAL ELECTRIC	IN4454
CR24, 26, 38–41	DIODE	50-464-074	MOTOROLA	IN4937
CR1, 3, 28–37	DIODE	50-464-003	MOTOROLA	IN4004
CR45	DIODE	"OMIT"		
CR44	DIODE	51-739-038	FAIRCHILD	IN748A
Q3, 4, 6, 7	TRANSISTOR	52-057-060	NATIONAL	2N5189
Q1, 2, 5	TRANSISTOR	52-057-013	MOTOROLA	2N2222A
Q8, 9	TRANSISTOR	64-657-000	RCA	2N6079
Q10, 11	TRANSISTOR	66-358-000	FAIRCHILD	S50706
Q12	TRANSISTOR	"OMIT"		
IC1	INTEGRATED CIRCUIT, OVP	67-379-001	MOTOROLA	MC3423 U/P1
IC2	INTEGRATED CIRCUIT, REGULATOR	66-993-001	ACDC	66-993-001
RT 1	THERMISTOR, 200 Ω	68-029-000	MIDWEST COMPONENTS	175Q20111
R24	RESISTOR, 100 Ω, 5%, 1/4W, CC	55-675-101	MIL-R-11E	RC07GF101J
R4, 14	RESISTOR, 10K, 5%, 1/4W, CC	55-675-103	MIL-R-11E	RC07GF103J
R48	RESISTOR, 47K, 5%, 1/4W, CC	55-675-473	MIL-R-11E	RC07GF471J
R1, 12	RESISTOR, 470 Ω, 5%, 1/4W, CC	55-675-471	MIL-R-11E	RC07GF471J
R13	RESISTOR, 20K, 5%, 1/4W, CC	55-675-203	MIL-R-11E	RC07GF203J
R32, 49	RESISTOR, 6.8K, 5%, 1/4W, CC	55-675-682	MIL-R-11E	RC07GF682J
R34	RESISTOR, 1K, 5%, 1/4W, CC	55-675-102	MIL-R-11E	RC07GF102J
R35, 36, 37	RESISTOR, 680 Ω, 5%, 1/4W, CC	55-675-681	MIL-R-11E	RC07GF681J
R38	RESISTOR, 33 Ω, 5%, 1/4W, CC	55-675-330	MIL-R-11E	RC07GF330J
R3, 5, 39, 41	RESISTOR, 47 Ω, 5%, 1/4W, CC	55-675-470	MIL-R-11E	RC07GF470J
R40, 42	RESISTOR, 2.7K, 5%, 1/4W, CC	55-675-272	MIL-R-11E	RC07GF272J
R8	RESISTOR	"OMIT"		
R18	RESISTOR	"OMIT"		
R26, 27, 28	RESISTOR, 2.43K, 1%, 1/10W, MF	57-757-338	MIL-R-10509	RN55C2431F
R29	RESISTOR, 215 Ω, 1%, 1/10W, MF	57-757-233	MIL-R-10509	RN55C2150F
R33	RESISTOR, 6.34K, 1%, 1/10W, MF	57-757-378	MIL-R-10509	RN55C6341F
R43,44	RESISTOR, 470 Ω, 5%, 1W, CC	50-460-471	MIL-R-11C	RC32GF471J
R45, 46	RESISTOR, 50 Ω, 5%, 5W, WW	52-441-500	MIL-R-26C	RW67V500
R50, 51	RESISTOR	"OMIT"		
T1	TRANSFORMER	52070	ACDC	52070
T2	TRANSFORMER	98752	ACDC	98752

* THESE COMPONENTS ARE COMMON TO ALL RS/RT 300W CONVERTERS.

MODEL RS/RT300, CONVERTER MODULE
CASE SIZE M30/T30
5 VOLTS

REF. DESIGNATOR	DESCRIPTION	ACDC P/N	MANUFACTURER	MANUFACTURER P/N
C5	CAPACITOR	"OMIT"		
C7	CAPACITOR, 0.47 µf, 50V, TANTALUM	58-577-014	KEMET	T390A474M035AS
C10, 11, 12	CAPACITOR, 0.01 µf, 100V, CERAMIC	67-159-103	VARADYNE	2120X7R100R103KA
R47	RESISTOR, 100 Ω, 1%, 1/10W, MF	57-757-201	MIL-R-10509	RN55C1000F
R2	RESISTOR, 34.8K, 1%, 1/10W, MF	57-757-453	MIL-R-10509	RN55C3482F
R7	RESISTOR, 10K, 1%, 1/10W, MF	57-757-401	MIL-R-10509	RN55C1002F
R16	RESISTOR, 1.0K, 1%, 1/10W, MF	57-757-301	MIL-R-10509	RN55C1001F
R17	RESISTOR, 3.74K, 1%, 1/10W, MF	57-757-356	MIL-R-10509	RN55C3741F
R19	RESISTOR, 1.37K, 1%, 1/10W, MF	57-757-314	MIL-R-10509	RN55C1371F
R20	RESISTOR, 3.24K, 1%, 1/10W, MF	57-757-350	MIL-R-10509	RN53C3241F
R22	RESISTOR, 6.65K, 1%, 1/10W, MF	57-757-380	MIL-R-10509	RN55C6651F
R11	RESISTOR, 1K, 5%, 1/4W, CC	55-675-102	MIL-R-11E	RC07GF102J
R9, 23, 30	RESISTOR, 470 Ω, 5%, 1/4W, CC	55-675-471	MIL-R-11E	RC07GF471J
R25	RESISTOR, 20K, 5%, 1/4W, CC	55-675-203	MIL-R-11E	RC07GF203J
R10	RESISTOR	"OMIT"		
R31	RESISTOR, 5.1K, 5%, 1/4W, CC	55-675-512	MIL-R-11E	RC07GF512J
R15, 21	POTENTIOMETER, 500 Ω	61-291-501	BOURNS	3389W-1-501
R6	POTENTIOMETER, 10K	61-291-103	BOURNS	3389W-1-103

CHYRON TELESYSTEMS
265 Bethpage-Spagnoli Road
Melville, New York 11747

TITLE SCHEMATIC POWER SUPPLY
MODEL RT-301-3 OR RT-301-9 RGU-1&2

C 2C0 0690 REV. A

SHEET 4 OF 4

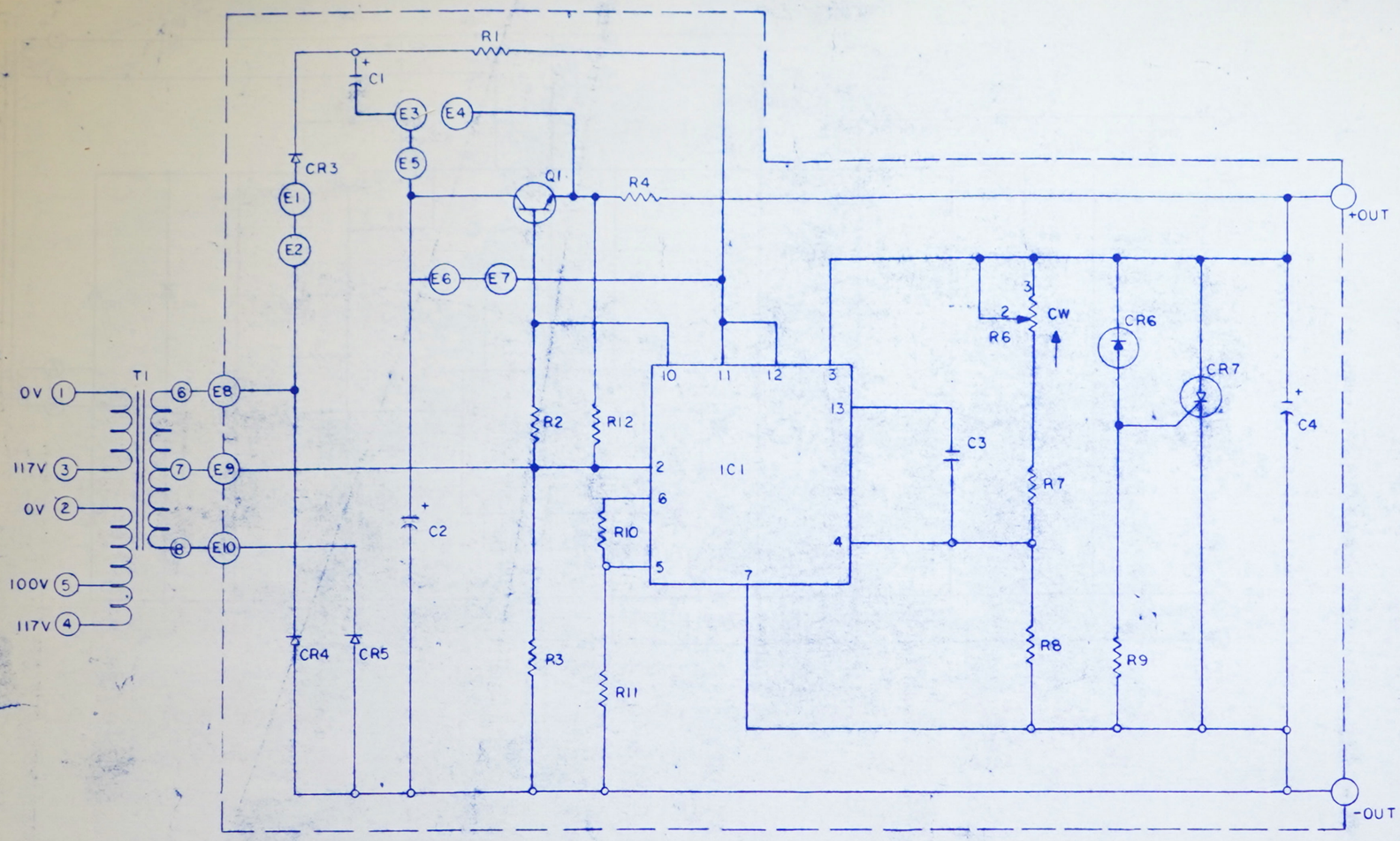

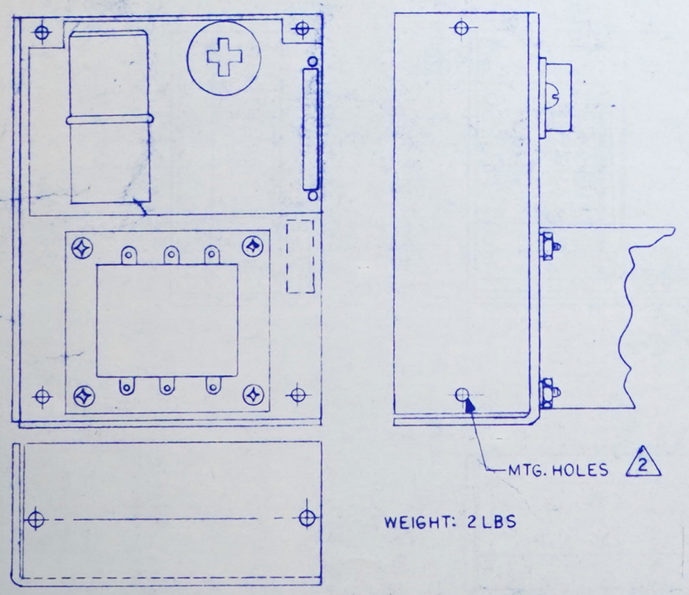

WEIGHT: 2 LBS

SCHEMATIC

LOCATION	DESCRIPTION	SUGGESTED MANUFACTURER/TYPE	A&DC P/N	5N3
T1	TRANSFORMER	ACDC		52417
Q1	TRANSISTOR	RCA 2N6055	61-687-012	
C1	CAPACITOR	ILLINOIS 227RAR016B 220/16V	62-708-025	
C2	CAPACITOR	ILLINOIS 109TTA016B 10000/16V	54-032-032	
C3	CAPACITOR	RMC JG-210 1000 PF/250V	52-231-102	
C4	CAPACITOR	ILLINOIS 227RAR016B 220/16V	62-708-025	
CR3	DIODE	MOTOROLA IN4004	50-464-003	
CR4,5	DIODE	MOTOROLA MR501	50-464-020	
CR6	DIODE	MOTOROLA IN752A	51-739-018	
CR7	SCR	RCA S2060F	52-714045	
R1	RESISTOR	1K 1/2W 5%	50-461-102	
R2	RESISTOR	523Ω 1/8W 1%	54-354-270	
R3	RESISTOR	2.21K 1/8W 1%	54-354-334	
R4	RESISTOR	.12Ω 2W 5%	52-064-128	
R6	POT	5K	59-561-502	
R8,10,11	RESISTOR	3.57K 1/8W 1%	54-354-354	
R9	RESISTOR	82Ω 1/2W 5%	50-461-820	
R12	RESISTOR	680Ω 1/2W 5%	50-461-681	
IC1	VOLTAGE REG	μA 723	66-780-000	

MODEL	RATING
ECV5N3-1	5V, 3A

AC CONNECTIONS AND FUSING

INPUT VOLTS	CONNECT	POWER TO	FUSE
100	1-2,3-4	1,5	1A
117	1-2,3-4	1,4	1A
220	2-3	1,5	1/2A
230/240	2-3	1,4	1/2A

SPECIFICATIONS-ECV SERIES, CASE A, SINGLE OUTPUT

AC INPUT: 100/117/220/230/240 VAC, 47-440Hz (Derate 10% for 50Hz operation)

FUSING: See chart for recommended external fusing

DC OUTPUTS: See chart

LINE REGULATION: ±0.05% for ±10% line change

LOAD REGULATION: ±0.05% for 50% load change

OUTPUT RIPPLE: 3mV Pk-Pk typical. 2mV RMS

TRANSIENT RESPONSE: 30usec for 50% load change

OVERLOAD AND SHORT CIRCUIT PROTECTION: Current limiting and foldback. Recovery automatic.

OVERVOLTAGE PROTECTION: Fixed on all 5 volt units at 6.2 ± 0.4 volts

TEMPERATURE RATING: Full rating, 0-50°C in free air. Derate linearly to 40% at 70°C.

TEMPERATURE COEFFICIENT: 0.02%/°C max.

REMOTE SENSING: Not available

VIBRATION: Per Mil-Std-810B, method 514, proc. I, curve AB (to 50Hz)

SHOCK: Per Mil-Std-810B, method 516, proc. V.

2 MTG HOLES ARE CORRECT SIZE FOR INSTALLATION OF 6-32 PEM NUT.

REV.	ENGRG CHANGE NO.	DWN.	CHKD.	APP'D.	MO. DAY YR.
ORIGINAL ISSUE		F.M.			9-24-82

CHYRON TELESYSTEMS
265 Spagnoli Road
Melville, New York 11747

TITLE
SCHEMATIC POWER SUPPLY
MODEL ECV5N3-1
ACDC

C 2A0 0536

SHEET 1 OF 1

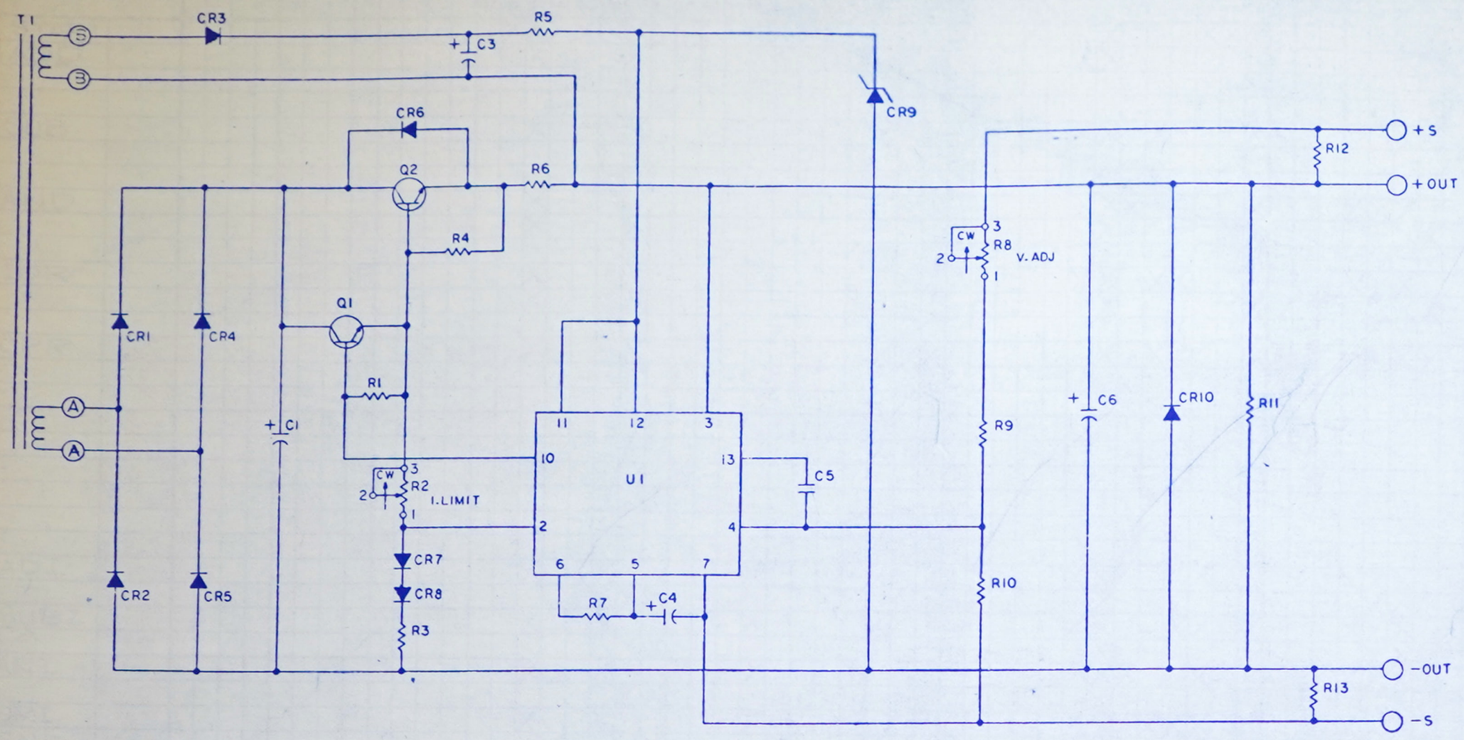

SCHEMATIC

	C6	47/50	CAPACITOR ALUM, ELECT	101-10112
	C5	470pf/1000	CERAMIC	105-10089
	C4	10/25	ALUM, ELECT	101-10114
	C3	220/16	ALUM, ELECT	101-10107
	C1	4700/63	CAPACITOR ALUM, ELECT	101-20952
	CR7,8	1N4448	DIODE 200 MA, 100V	111-20058
	CR3,6,10	1N4003	1A 200V	111-10251
	CR1,2,4,5	1N5401	3A 100V	111-10252
4	CR9	———	DIODE, ZENER	———
	Q2	2N3055	TRANSISTOR NPN POWER	171-10262
	Q1	2N6551	TRANSISTOR NPN DRIVER	172-10249
	U1	μA723	I.C. VOLTAGE REGULATOR	130-10287
	R6	.22	RESISTOR 2W, 10%, BWH	158-10079
	R12,13	6.8	RESISTOR 1/2W, 5%, CF	151-10313
	R9	4.7K		151-10381
	R4,5,7	220		151-10349
	R3	10K		151-10389
	R1,10,11	2.4K	RESISTOR 1/2W, 5%, CF	151-10374
	R2	500	POTENTIOMETER	154-20957
	R8	2K	POTENTIOMETER	154-20020
	T1		TRANSFORMER	082-50095
	P.C. B		PRINTED CIRCUIT BOARD	505-51670
	QTY REQD / ITEM	PART OR IDENTIFYING NO.	NOMENCLATURE OR DESCRIPTION	POWER-ONE STD. P/N

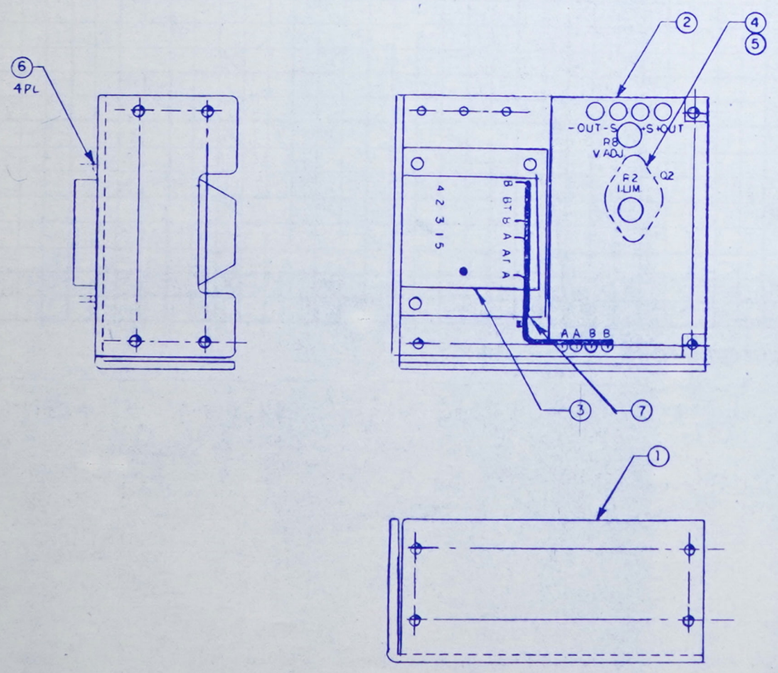

ASSEMBLY

	1	7		TYWRAP	316-20664
	4	6		NUTS, PRESS	340-10298
	1	5		MTG KIT TO-3	088-20130
	1	4	2N3055	TRANSISTOR Q2	171-10262
	1	3		TRANSFORMER	082-50095
	1	2		PRINTED CIRCUIT BOARD	081-51670
	1	1		CHASSIS	412-50068
	QTY REQD	ITEM	PART OR IDENTIFYING NO.	NOMENCLATURE OR DESCRIPTION	POWER-ONE STD. P/N

PARTS LIST

4 PARTS NOT USED ON THIS ASSEMBLY.
2. ALL CAPACITOR VALUES ARE IN MICROFARADS / VOLTS
1 ALL RESISTOR VALUES ARE IN OHMS.

NOTES: UNLESS OTHERWISE SPECIFIED

REV	ENGRG CHANGE NO.	DWN.	CHKD.	APP'D	MO. DAY YR
ORIGINAL ISSUE	CN 1903	FM			5-11-82

CHYRON TELESYSTEMS
265 Spagnoli Road
Melville, New York 11747

TITLE SCHEMATIC POWER SUPPLY
MODEL HC 24, 24-A (INTL.)
POWER ONE

C 2A0 0491

SHEET 1 OF 1

MICROINSTRUCTION BITS

ADDR	INSTRUCTION	COMMENTS
00	START	77400 → MASK TO RST
01	ADD	A+B → SKPTST
02		
03		
04	SUB	A-B → SKPTST
05		
06		
07	AND	A∧B → SKPTST
10		
11		
12	IOR	A∨B → SKPTST
13		
14		
15	CPR	A-B → SKPTST
16		
17		
20		
21		
22		
23		
24		
25		
26	ADI	ADD MD(0-7) TO R(X)
27		OVR → EBIT END SEQ, PST
30	SUBI	SUB MD(0-7) FROM R(X)
31		OVR → EBIT END SEQ PST
32	ANI	AND MD(0-7) TO R(X)
33		END SEQ, PST
34	ORI	OR MD(0-7) TO R(X)
35	END	END SEQ PST
36	CPI	COMPARE MD(0-7) WITH R(X)
37		CONDITIONAL END SEQ
40		INC K, MA'60 TO END
41	HLT	HLT
42		END SEQ, PST
43	RST	SYSRST, END SEQ, PST
44		
45	ICR	B+1 → B → SKPTSTI
46		
47		
50	DCR	B-1 → B → SKPTSTI
51		
52		
53	CML	ONES COMP → R(X), SKPTEST
54		
55		
56	NEG	TWOS COMP ; SKPTST
57		END SEQ

Microprogramming Form

C14 C11 C10 C9 C7 C6 C5

REV	ENGRG CHANGE NO	DWN	CHKD	APP'D	MO DAY YR
D	CN-2819	F.M.			2-25-85
C	CN 1871	A.S			3-22-82
B	CN-1778	M.S.			12-11-81
A	CN 1484	M.S.			10-7-80
ORIGINAL ISSUE		M.S.			10-15-79

CHYRON TELESYSTEMS 265 Bethpage-Spagnoli Road Melville, New York 11747

TITLE MICRO PROGRAMMING FORMS RGU I&2

C 2 A0 0280 SHEET 1 OF 9

MICROINSTRUCTION BITS

INSTRUCTION		REGISTER SELECT B2 (47)	B1 (46)	B0 (45)	A2 (44)	A1 (43)	A0 (42)	CCEN (41)	PO (40)	WRT (39)	SHIFT CNTL S1 (38)	S0 (37)	MD MASK M1 (36)	M0 (35)	E BIT CNTL E3 (34)	E2 (33)	E1 (32)	LRC CRIN (31)	OUTPUT BUS O4 (30)	O2 (29)	O1 (28)	INPUT BUS IN4 (27)	IN2 (26)	IN1 (25)	ALU CONTROL DEST I8 (24)	I7 (23)	I6 (22)	FUNC I5 (21)	I4 (20)	I3 (19)	SOURCE I2 (18)	I1 (17)	I0 (16)	TEST FIELD T2 (15)	T1 (14)	T0 (13)	SEQUENCE CONTROL C3 (12)	C2 (11)	C1 (10)	C0 (9)	BRANCH ADDRESS BA8 (8)	BA7 (7)	BA6 (6)	BA5 (5)	BA4 (4)	BA3 (3)	BA2 (2)	BA1 (1)	BA0 (0)	COMMENTS
	60																																																	
	61																																																		
CLR	62			X																					X	X				X	X				X	X													CLR REG
SKPTST	63																																					X	X			X	X	X	X	X	X	S	K	P	L	N	H	TEST→SKPLNH
	64							X	X																																									END SEQ, READ MEM
STE	65							X							X	X	X									X																										SET E, TO SKPTST
	66																																																		
	67																																																		
EXB	70			X			X	X														X			X						X	X					X	X													EX BYTE, TO SKPTST
	71																																																		
	72																																																		
LSR	73			X								X			X	X									X	X					X	X					X	X													LOGICAL SHFT RT
	74			X				X																	X						X						X	X													
	75																																																		
LSL	76			X								X			X										X	X					X	X					X	X													LOGICAL SHFT LFT
	77			X				X																	X						X						X	X													
	100																																																		
LRR	101			X							X														X	X					X	X					X	X													LOGICAL ROTATE RT
	102			X				X																	X						X						X	X													
	103																																																		
LRL	104			X							X														X	X					X	X					X	X													LOGICAL ROTATE LFT
	105			X				X																	X						X						X	X													
	106																																																		
ERR	107			X											X	X									X	X					X	X					X	X													EXTENDED ROTATE RT
	110			X				X																	X						X						X	X													
	111																																																		
ERL	112			X											X										X	X					X	X					X	X													EXTENDED ROTATE LFT
	113			X				X																	X						X						X	X													
	114																																																		
ASR	115			X							X														X	X					X	X					X	X													ARITH SHFT RT
	116			X				X																	X						X						X	X													
	117																																																		
ASL	120			X		X				X				X											X	X					X	X					X	X													ARITH SHFT LFT
	121			X		X				X						X									X						X						X	X													RESTORE SIGN
	122			X		X				X															X						X						X	X													
DISP(R)	123							X												X	X				X						X						X	X													K(X)→DISREG
	124							X																	X						X						X	X													END SEQ
	125																																																		
	126																																																		
	127																																																		
	130																																																		
	131																																																		
	132																																																		
	133																																																		
MEMWT	134								X	X																					X	X					X	X													WR MEM
	135																																																		WAIT
	136								X																																									PST
	137									X																					X	X					X	X													RD MEM TO R(7) END SEQ

Microprogramming Form

C14 C11 C10 C9 C7 C6 C5

		DRAWN MS	CHKD	APP'D	DATE

CHYRON TELESYSTEMS
265 Bethpage-Spagnoli Road
Melville, New York 11747

TITLE MICROPROGRAMMING FORMS RGU I&2

C 2A0 0280 REV D

SHEET 2 OF

MICROINSTRUCTION BITS

INSTRUCTION		PCLR	REGISTER SELECT B2	B1	B0	A2	A1	A0	CCEN	PO	WRT	SHIFT CNTL S1	S0	MC MACK I1	I0	E BIT CNTL E3	E2	E1	CRIN	OUTPUT BUS O4	O2	O1	INPUT BUS IN4	IN2	IN1	ALU CONTROL DEST I8	I7	I6	FUNC I5	I4	I3	SOURCE I2	I1	I0	TEST FIELD T2	T1	T0	SEQUENCE CONTROL C3	C2	C1	C0	BRANCH ADDRESS BA8	BA7	BA6	BA5	BA4	BA3	BA2	BA1	BA0	COMMENTS
	140																																																			
MDR	141																																																			TEST INEX I/O EFFADR
	142																																																		
	143																																																		TST IO ACK-TO MDRTN
	144																																																	ENDSEQ PST
	145																																																	
IDR	146																																																	TEST INEX IO, EFF ADR
	147																																																	SENT OUT FR DEV
	150																																																	TST IO ACK TO TDRTN
	151																																																	ENDSEQ PST
	152																																																	
IRD	153																																																	TEST INEX IO; EFF ADR
	154																																																	SEND OUT TO DEV
	155																																																	TST I/O ACK-TO TRDPTN
	156																																																	ENSEQ, PST
	157																																																	
TSR	160																																																	TEST INEXIO; EFF ADR
	161																																																	TSR → IOB → R(X)
	162																																																	TSR → IOB'S → R(X)
	163																																																	ENSEQ PST
ARM	164																																																	CLR INT FROM MASK
	165																																																	ARM INT
	166																																																	PST, END SEQ
DSA	167																																																	DISARM INTS
	170																																																	PST, ENDSEQ
	171																																																	
ENI	172																																																	ENABLE INTS
	173																																																	PST END SEQ
	174																																																	
DSI	175																																																	DISABLE INTS
	176																																																	PST END SEQ
	177																																																	
NEXT	200																																																	K+1 => K, MA
	201																																																	END SEQ
	202																																																	
SWENT	203																																																	SW => R(7), DISREG END SEQ
	204																																																	
INIT	205																																																	RESET END SEQ
	206																																																	
	207																																																	
	210																																																	
	211																																																	
CLR DIS REG	212																																																	CLR SWREG TO DISREG
	213																																																	
DIS REG	214																																																	SW REG => DISREG END SEQ
	215																																																	
	216																																																	
	217																																																	

Microprogramming Form

C14 C11 C10 C9 C7 C6 C5

REV	ENGRG CHANGE NO	DWN	CHKD	APP D	MO DAY YR
ORIGINAL ISSUE		MS			

CHYRON TELESYSTEMS
265 Bethpage-Spagnoli Road
Melville, New York 11747

TITLE MICROPROGRAMMING FORMS RGU-I&2

C ZAO 0280 REV D

SHEET 3 OF

MICROINSTRUCTION BITS

INSTRUCTION		PCLR	REGISTER SELECT B2 47	B1 46	B0 45	A2 44	A1 43	A0 42	SHIFT CNTL CCEN 41	PO 40	WRT 39	MD MASK S1 38	S0 37	M1 36	M0 35	E BIT CNTL E3 34	E2 33	E1 32	SRC CRIN 31	OUTPUT BUS O4 30	O2 29	O1 28	INPUT BUS IN4 27	IN2 26	IN1 25	ALU CONTROL DEST I8 24	I7 23	I6 22	FUNC I5 21	I4 20	I3 19	SOURCE I2 18	I1 17	I0 16	TEST FIELD T2 15	T1 14	T0 13	SEQUENCE CONTROL C3 12	C2 11	C1 10	C0 9	BRANCH ADDRESS BA8 8	BA7 7	BA6 6	BA5 5	BA4 4	BA3 3	BA2 2	BA1 1	BA0 0	COMMENTS
ENT(R)	220																																																		OV R7 → R(X)
DISP(R)	221																																																		R(X) → DISPLAY
	222																																																	
	223																																																OV R(X) → R7
	224																																																R7 → DISPLAY
	225																																																
ENT(MD)	226																																																(MEMWT)	R(7) → R(5) 60 TO 134
	227																																																
	230																																																
DISP(MD)	231																																																R(5) → R7
	232																																																R(5) → DISPLAY
	233																																															R(7) → R5 END SEQ
ENT(R7)	234																																																} SHIFT 3 DIGITS (R7)
	235																																																
	236																																																
	237																																																R7 + SWITCH → R7 → DISPLAY
	240																																															
CLR(R7)	241																																																0 → R7 (0 ∧ Q → R7)
	242																																																R7 → DISPLAY
	243																																																
HLT(DISPR7)	244																																																R7 → DISPLAY
	245																																																
	246																																																
ENT(K)	247																																																R7 → K (MEM)
	250																																																
	251																																																
DCO	252																																																	INEXIO	TEST, INEX IO, EFF ADR
	253																																																XMIT CNTRL, D → Q
	254																																																DCORIN	TEST IO ACK, TO TRDRTN
	255																																																	END SEQ PST
	256																																																
INEXIO	257																																																	[RTJ]R(3)+IR → EFF ADR
	260																																																
IDRO1	261																																																TDR1END	TEST IO ACK
	262																																																	SWREG → R(X)
	263																																																K+1 → K
TDR1FND	264																																																END SEQ, PST
	265																																																
TRDO1	266																																																R(X) → DISP
	267																																																END SEQ
	270																																																
	271																																																
	272																																																
	273																																																
	274																																																
	275																																																
	276																																																
	277																																																

Microprogramming Form

C14 C11 C10 C9 C7 C6 C5

REV	ENGRG CHANGE NO	DWN	CHKD	APP'D	MO DAY YR
ORIGINAL ISSUE		M.S			

CHYRON TELESYSTEMS
265 Bethpage-Spagnoli Road
Melville, New York 11747

TITLE MICROPROGRAMMING FORMS
RGU I&2

C 2A0 0280 REV D

SHEET 4 OF

MICROINSTRUCTION BITS

INSTRUCTION		REGISTER SELECT B2 47	B1 46	B0 45	A2 44	A1 43	A0 42	CCEN 41	PST 40	R/W 39	SHIFT CNTL S1 38	S0 37	MD MASK M1 36	M0 35	E BIT CNTL E2 34	E1 33	E0 32	CIN 31	OUTPUT BUS 02 30	01 29	00 28	INPUT BUS D2 27	D1 26	D0 25	ALU CONTROL DEST I8 24	I7 23	I6 22	FUNC I5 21	I4 20	I3 19	SOURCE I2 18	I1 17	I0 16	TEST FIELD T2 15	T1 14	T0 13	SEQUENCE CONTROL C3 12	C2 11	C1 10	C0 9	BRANCH ADDRESS P8 8	P7 7	P6 6	P5 5	P4 4	P3 3	P2 2	P1 1	P0 0	COMMENTS
	300																																																
DMA RTN	301								X													X					X		X		X																			PST, CONT
HERE	302																																																	MD→IOB, TRD, TST BSY, TO HERE PST
	303																																																	MD→IOB CONT.
	304	X	X		X	X															X					X		X		X																			K→MA, CONT.
	305						X	X																																									END SEQ PST
	306																																																	
INTER	307					X													X			X					X		X		X																			PSH STATUS K=>MD, E=>MD15
	310	X	X		X	X			X																																									RD VECT(2914) =>K, MA
	311																	X																																PST, WRT K+1=>MA, K
	312																																																	WAIT RESET E, INT, INC CTR
	313																																																	PST
	314	X	X		X	X																																												MD → K, MA
	315						X	X																																										PST END SEQ
	316																																																	
RTJ	317														X							X					X		X		X																			RESET E, DEC CTR, CONT;
	320																			X																															RTJ VECT → MA CONT
	321								X																																										PST CONT
	322	X	X		X	X					X				X							X					X		X		X																			MD =>K, MA MD(15) →E
	323						X	X	X																																										POP STATUS,
	324																																																	PST, END SEQ
	325																																																	
	326																			X																															
	327																																																	
	330																																																	
MDRTN	331				X	X																X					X		X		X																			AVD, D=IO BUS →RX
	332	X	X		X	X																																													IACK → MA RTJ
	333																																																	
	334																																																	
TDRTN	335				X	X																X					X		X		X																			IO BUS → D → RX CONT
	336						X	X																																											INCK → MA RTJ
	337																																																	
TRD RTN	340				X	X																X					X		X		X																			CONTINUE TO SEND IOB'S
RETURN	341				X	X												X		X		X					X		X		X																			INC, K, MA, RTJ
DCO RTN	342																																																	CONTINUE TO SEND IOB'S TO RET
	343																																																	
	344																																																	
	345																	X		X																															
	346																																																		
	247																																																		
FETCH	350				X	X															X		X					X		X																			MD → IR, CONT
	351	X	X																																															K→MA, MD→FR JMP MAP
	352																																																	
SKLNH	353	X	X		X	X					X											X		X					X		X																			ADD 0,1,2 TO MASK {K / MA
	354						X	X																																											PST END SEQ
	355																																																	
	356																																																	
	357																																																	

XRETURN

Microprogramming Form

C14 C11 C10 C9 C7 C6 C5

REV	ENGNG CHANGE NO	DRN	CHKD	APP'D	MO DAY YR
ORIGINAL ISSUE		M.S.		DJK	

CHYRON TELESYSTEMS
265 Bethpage-Spagnoli Road
Melville, New York 11747

TITLE MICROPROGRAMMING FORMS RGU I & 2

C Z14 0 028 0 REV D

SHEET 5 OF

MICROINSTRUCTION BITS

INSTRUCTION		COMMENTS
RST	360	SYSRST, CLRE BIT
	361	CLR INTS
	362	DSI NTS
	363	DSA INTS-T
	364	END SEQ PST
	365	
	366	
	367	
WAT	370	DECREMENT K, MA
	371	END SEQ PST
	372	
SKPTST1	373	TEST→SKPLNH, OVR→E
	374	END SEQ PST
	375	
	376	
DMAIN	377	
	400	
	401	
	402	
	403	
	404	
	405	
	406	
	407	
	410	
	411	
	412	
	413	
	414	
	415	
	416	
	417	
	420	
	421	
	422	
	423	
	424	
	425	
	426	
	427	
	430	
	431	
	432	
	433	
	434	
	435	
	436	
	437	

	PCLR	REGISTER SELECT							SHIFT CNTL		MD MASK		E BIT CNTL			SRC	OUTPUT BUS			INPUT BUS		ALU CONTROL DEST			ALU CONTROL FUNC			ALU CONTROL SOURCE			TEST FIELD			SEQUENCE CONTROL			BRANCH ADDRESS								
		B2	B1	B0	A2	A1	A0	CCEN	PO	WRT	S1	S0	M1	M0	E3	E2	E1	CRIN	O4	O2	O1	IN4	IN2	IN1	I8	I7	I6	I5	I4	I3	I2	I1	I0	T2	T1	T0	C3	C2	C1	C0	BA8	BA7	BA6	BA5	BA4	BA3	BA2	BA1	BA0
		47	46	45	44	43	42	41	40	39	38	37	36	35	34	33	32	31	30	29	28	27	26	25	24	23	22	21	20	19	18	17	16	15	14	13	12	11	10	9	8	7	6	5	4	3	2	1	0

SKPLNH

Microprogramming Form

C14 C11 C10 C9 C7 C6 C5

CHYRON TELESYSTEMS
265 Bethpage-Spagnoli Road
Melville, New York 11747

MICROPROGRAMMING FORMS
RGU I&2

C 2A0 0280 REV D

MICROINSTRUCTION BITS

INSTRUCTION		PCLR	REGISTER SELECT B2 47	B1 46	B0 45	A2 44	A1 43	A0 42	SHIFT CNTL CCEN 41	P0 40	WRT 39	S1 38	S0 37	MD MASK M1 36	M0 35	E BIT CNTL E3 34	E2 33	E1 32	CRIN 31	OUTPUT BUS O4 30	O2 29	O1 28	INPUT BUS IN4 27	IN2 26	IN1 25	ALU CONTROL DEST I8 24	I7 23	I6 22	FUNC I5 21	I4 20	I3 19	SOURCE I2 18	I1 17	I0 16	TEST FIELD T2 15	T1 14	T0 13	SEQUENCE CONTROL C3 12	C2 11	C1 10	C0 9	BRANCH ADDRESS BA8 8	BA7 7	BA6 6	BA5 5	BA4 4	BA3 3	BA2 2	BA1 1	BA0 0	COMMENTS
LDR(DIR)	440																																																						TEST IND, IR8, IRO => M8
	441																																																						READ MEM, INCK
LDEND	442																																																						MD => R(X) K => MA
	443																																																								END SEQ PST
	444																																																								
LDR(REL)	445																																																								TEST IND, K+IR8, IRO => MA
	446																																																									IND LDEND READ MEM GO TO LD END, INC K
	447																																																								
LDR(INEX)	450																																																								TEST IND R(X)+IR8, IRO => MA
	451																																																									IND LDEND READ MEM GO TO LD END, INC K
	452																																																								
IND	453																																																								READ MEM
INDI	454																																																									TEST FURTHER INDIRECTION (RTJ)
	455																																																									GO TO IND IND
	456																																																								
STR(DIR)	457																																																										TEST IND, IR8, IRO => MA IND
	460																																																									R(X) => MD
STREND	461																																																									WRITE MEM, INC K.
	462																																																									WAIT K => MA
	463																																																									END SEQ, PST
	464																																																								
SIR(REL)	465																																																									TEST IND K+IR8, IRO => MA IND
	466																																																									R(X) => MD GO TO STREND STREND
	467																																																								
STR(INEX)	470																																																								TEST IND R(X)+IR8, IRO => MA IND
	471																																																									R(X) = MD GO TO STREND STREND
	472																																																								
JMP(DIR)	473																																																								TEST IND, IR(8). IR(0) = K MA IND JMP
	474																																																									END SEQ, PST
	475																																																								
JMP(REL)	476																																																								TEST IND K+IR(8). IR(0) = K MA IND JMP
	477																																																									PST, END SEQ
	500																																																								
JMT(INEX)	501																																																								TEST IND R(X)+IR(8) IR(0) => K MA IND JMP
	502																																																									END SEQ, PST
	503																																																								
	504																																																								
IND JMP	505																																																								READ MEM
IND JMPI	506																																																								MD → K MA TEST FURTHER ~~IND~~ (RTJ)
	507																																																								GO TO INP JMP IND JMP
	510																																																							
	511																																																								
	512																																																								
	513																																																								
	514																																																								
	515																																																								
	516																																																								
	517																																																								

Microprogramming Form

C14 C11 C10 C9 C7 C6 C5

REV	ENGR CHANGE NO	DWN	CHKD	APP'D	MO DAY YR
ORIGINAL		TMS			

CHYRON TELESYSTEMS
265 Bethpage-Spagnoli Road
Melville, New York 11747

TITLE MICROPROGRAMMING FORMS RGU I & 2

C ZAO 0280 REV D

SHEET 7 OF 8

MICROINSTRUCTION BITS

INSTRUCTION		REGISTER SELECT B2 47	B1 46	B0 45	A2 44	A1 43	A0 42	CCEN 41	PO 40	WRT 39	SHIFT CNTL S1 38	S0 37	NO MASK M1 36	M0 35	E BIT CNTL E3 34	E2 33	E1 32	CRIN 31	OUTPUT BUS O4 30	O2 29	O1 28	INPUT BUS IN4 27	IN2 26	IN1 25	ALU CONTROL DEST I8 24	I7 23	I6 22	FUNC I5 21	I4 20	I3 19	SOURCE I2 18	I1 17	I0 16	TEST FIELD T2 15	T1 14	T0 13	SEQUENCE CONTROL C3 12	C2 11	C1 10	C0 9	BRANCH ADDRESS BA8 8	BA7 7	BA6 6	BA5 5	BA4 4	BA3 3	BA2 2	BA1 1	BA0 0	COMMENTS
JSB(DIR)	520	X	X	X	X	X	X											X			X																															K+1 → R(4)
	521	X	X										X	X																																					TEST IND IR(0-8) → $\overset{K}{MA}$
	522				X	X	X	X	X																																											END SEQ PST
	523																																																		
JSB(REL)	524	X	X	X	X	X	X											X			X																															K+1 = R 4
	525	X	X										X	X																																					TEST IND K+IR(8-0) = $\overset{K}{MA}$
	526				X	X	X	X	X																																											END SEQ PST
	527																																																		
JSB(INEX)	530	X	X	X	X	X	X											X			X																															K+1 → Q (SAVE K+1)
	531	X	X										X	X																																					TEST IND R(C)+IR(8-0) = $\overset{K}{MA}$
	532				X	X	X	X	X																																											Q → R(4)
	533																																																		
ISZ(DIR)	534	X	X	X	X	X	X						X	X							X																															TEST IND IR(8-0) =>MA
	535							X	X																																											READ MEM
ISZEND	536	X	X	X	X	X	X											X			X																															ING DATA TO MD
	537																																																		TEST FOR ZERO
	540							X	X																																											WRITE MEM
	541	X	X	X	X	X	X											X			X																															K+1 => K, MA
	542							X	X																																											END SEQ, PST
SKIPPY	543	X	X	X	X	X	X											X			X																															WRITE MEM K+1 => MA
	544							X	X																																											WAIT K+1 => MA
	545																																																		READ MEM END SEQ
	546																																																		
ISZ(REL)	547	X	X	X	X	X	X						X	X							X																															TEST IND K+IR(8-0) =>MA
	550							X	X																																											READ MEM GO TO ISZ END
	551																																																			
ISZ(INEX)	552	X	X	X	X	X	X						X	X							X																															TEST IND R(X)+IR(8-0) →MA
	553							X	X																																											
	554																																																			
	555																																																			
	556																																																			
	557																																																			
DSZ(DIR)	560	X	X	X	X	X	X						X	X							X																															TEST IND IR(8-0) =>MA
	561							X	X																																											READ MEM
	562																				X																															DEC DATA
	563	X	X	X	X	X	X											X			X																															TEST FOR ZERO
	564							X	X																																											WRITE MEX
	565	X	X	X	X	X	X											X			X																															WAIT K+1 = $\overset{K}{MA}$
	566							X	X																																											END SEQ, PST
DSZ(REL)	567	X	X	X	X	X	X						X	X							X																															TEST IND K+IR(8-0) >MA
	570							X	X																																											READ MEM GO TO DSZ END
	571																																																			
DSZ(INEX)	572	X	X	X	X	X	X						X	X							X																															TEST IND R(X)+IR(8-0) =>MA
	573							X	X																																											READ MEM, GO TO DSZ END
	574																																																			
	575																																																			
	576																																																			
	577																																																			

Microprogramming Form

C14 C11 C10 C9 C7 C6 C5

REV	ENGRG CHANGE NO	DWN	CHKD	APP'D	MO DAY YR
ORIGINAL ISSUE		W.S.			

CHIRON TELESYSTEMS 265 Bethpage-Spagnoli Road Melville, New York 11747 (516)

TITLE MICROPROGRAMMING FORMS RGUI #2

C 2A0 0280 REV D

SHEET 8 OF 8

MOST SIGNIFICANT BIT →

				B8	0	0	0	0	0	0	0	0	1	1	1	1	1	1	1	1
				B7	0	0	0	0	1	1	1	1	0	0	0	0	1	1	1	1
				B6	0	0	1	1	0	0	1	1	0	0	1	1	0	0	1	1
				B5	0	1	0	1	0	1	0	1	0	1	0	1	0	1	0	1
B4	B3	B2	B1																	
0	0	0	0				SPACE	∅		P		p	ShRoLf				AUX # 0	CRAWL	FONT 1	COLOR FONT
0	0	0	1				!	1	A	Q	a	q	ShRoRt				AUX # 1	ROLL	FONT 2	TAB SET
0	0	1	0				@	2	B	R	b	r					AUX # 2	DELAY	FONT 3	TAB CLEAR
0	0	1	1				#	3	C	S	c	s	ShRoDN				AUX # 3	SLOW REVEAL	FONT 4	CENTER LINE
0	1	0	0				$	4	D	T	a	t	ShRoUp				AUX # 4	PAUSE	NO EDGE	CENTER PAGE
0	1	0	1				%	5	E	U	e	u					AUX # 5	SPEED 1	BORDER	ROW DEL
0	1	1	0				&	6	F	V	f	v					AUX # 6	SPEED 2	GREEN	ROW INS
0	1	1	1				'	7	G	W	g	w					AUX # 7	SPEED 3	BLUE	DEL CHAR
1	0	0	0				(	8	H	X	h	x	CURS Lf	ShChLf			AUX # 8	SPEED 4	CYAN	INS CHAR
1	0	0	1				)	9	I	Y	i	y	CURS Rt	ShChRt			AUX # 9	XFER	RED	NEW LINE
1	0	1	0				*	:	J	Z	j	z		ESC			CLEAR	DO	YELLOW	FLASH
1	0	1	1				+	;	K		k		CURSDN	ShChDN			ERASE	TAB	MAGENTA	EOM
1	1	0	0				,	<	L		l		CURS UP	ShChUp			RECORD	AUTO PAUSE	WHITE	DROP SHADOW
1	1	0	1				-	=	M		m						LOWER THIRD READ		AUTO DISPLAY	DRIVE SELECT
1	1	1	0				.	>	N		n						READ	CHANGE	BLACK	
1	1	1	1		EXEC		/	?	O	_	o						DELET MSG	CTRL	HOME	RM

REV.	ENGRG CHANGE NO.	DWN.	CHKD.	APP'D.	MO. DAY YR.
A	CN-2084	D.W.			2-2-83

ORIGINAL ISSUE

265 Bethpage-Spagnoli Road
Melville, New York 11747

KEYBOARD CODES
RG-44

C 2A0 0425